# RK3399_W

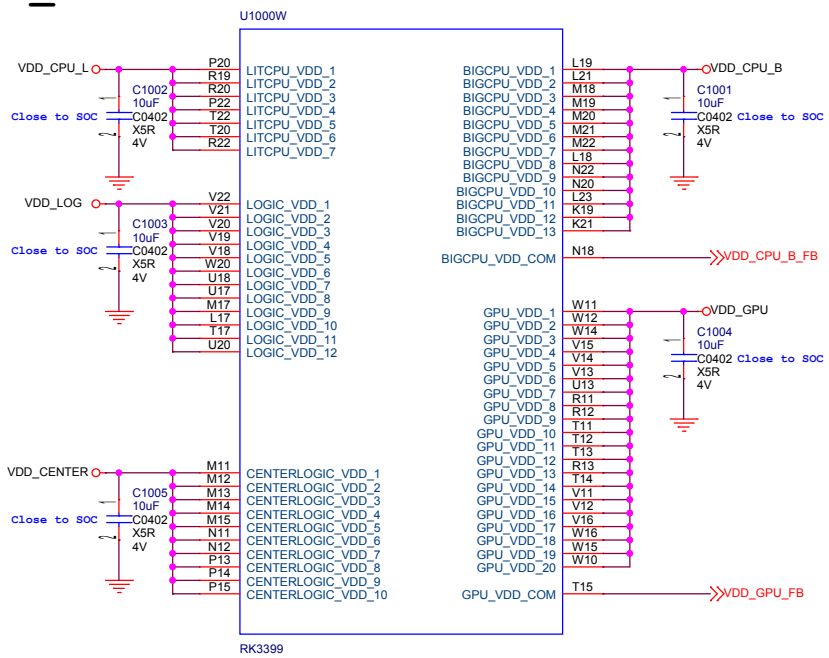


# RK3399_X

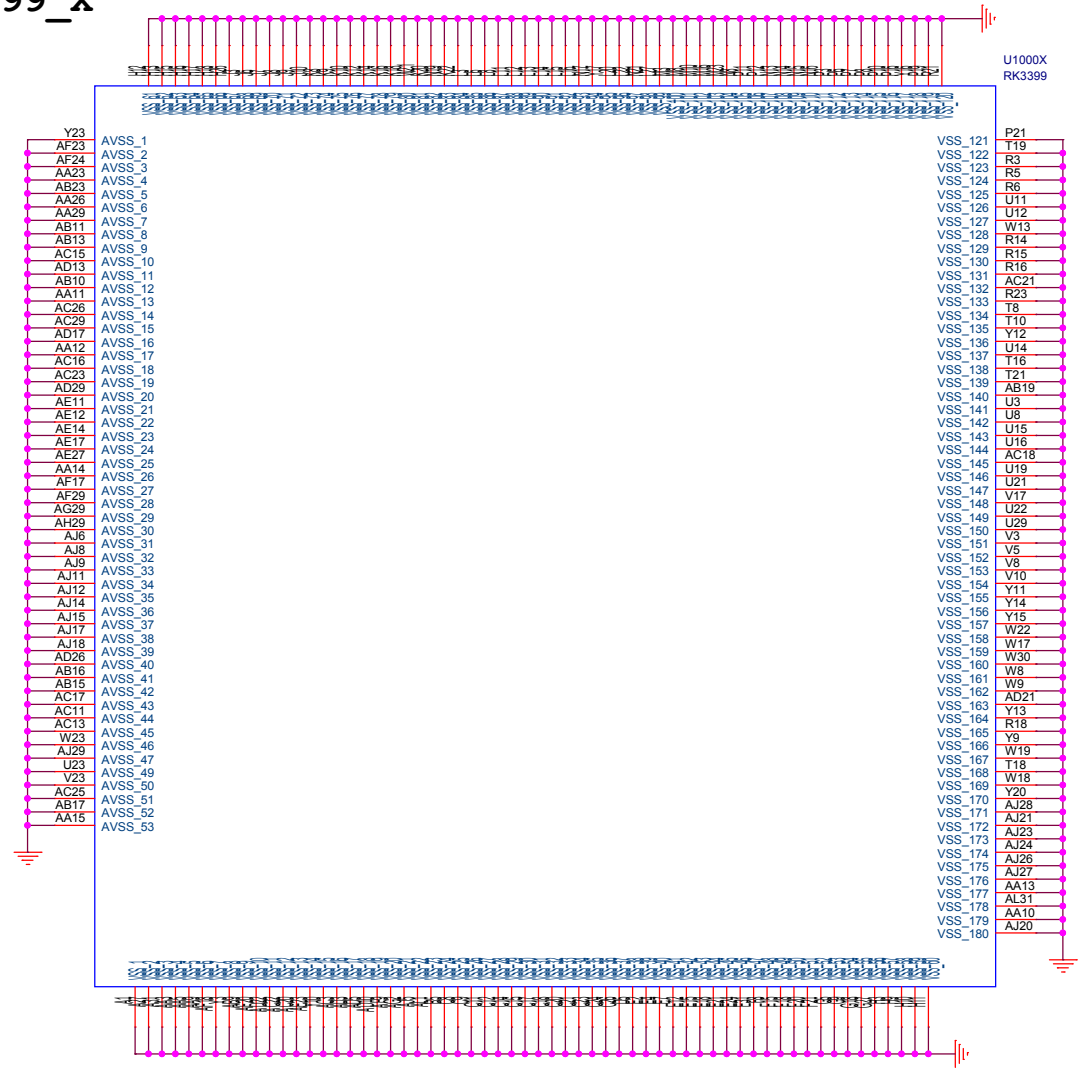


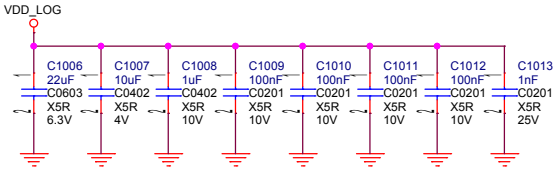


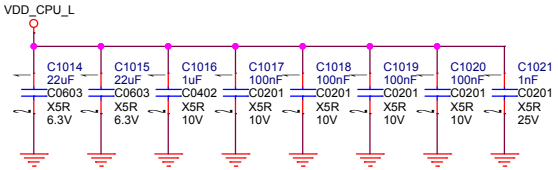


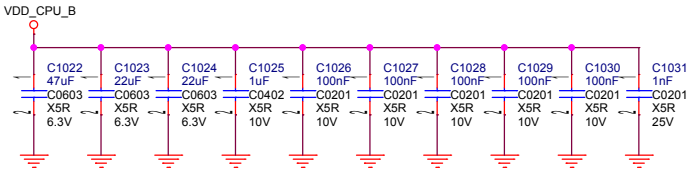


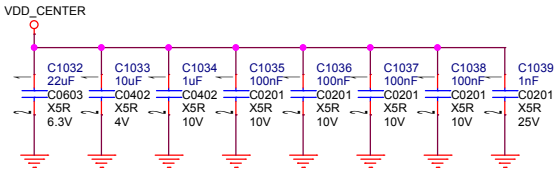


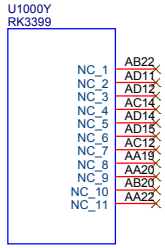


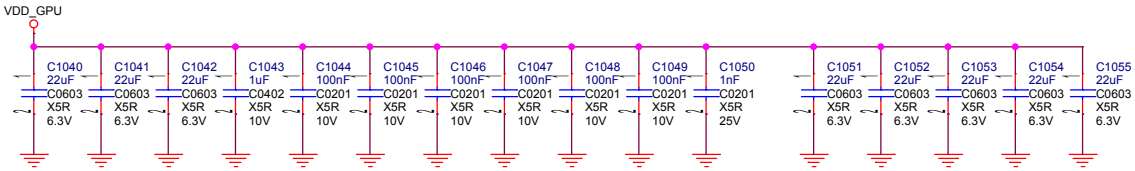


| | | | |
|---|---|---|---|
| Xunlong Software Co.,Limited | | | |
| Design Name | ORANGEPI 800 | | |
| Size A3 | Page Name RK3399 Power | | Rev 1.8 |
| Date: Tuesday, November 08, 2022 | Sheet 8 of 27 | | |

# RK3399_C

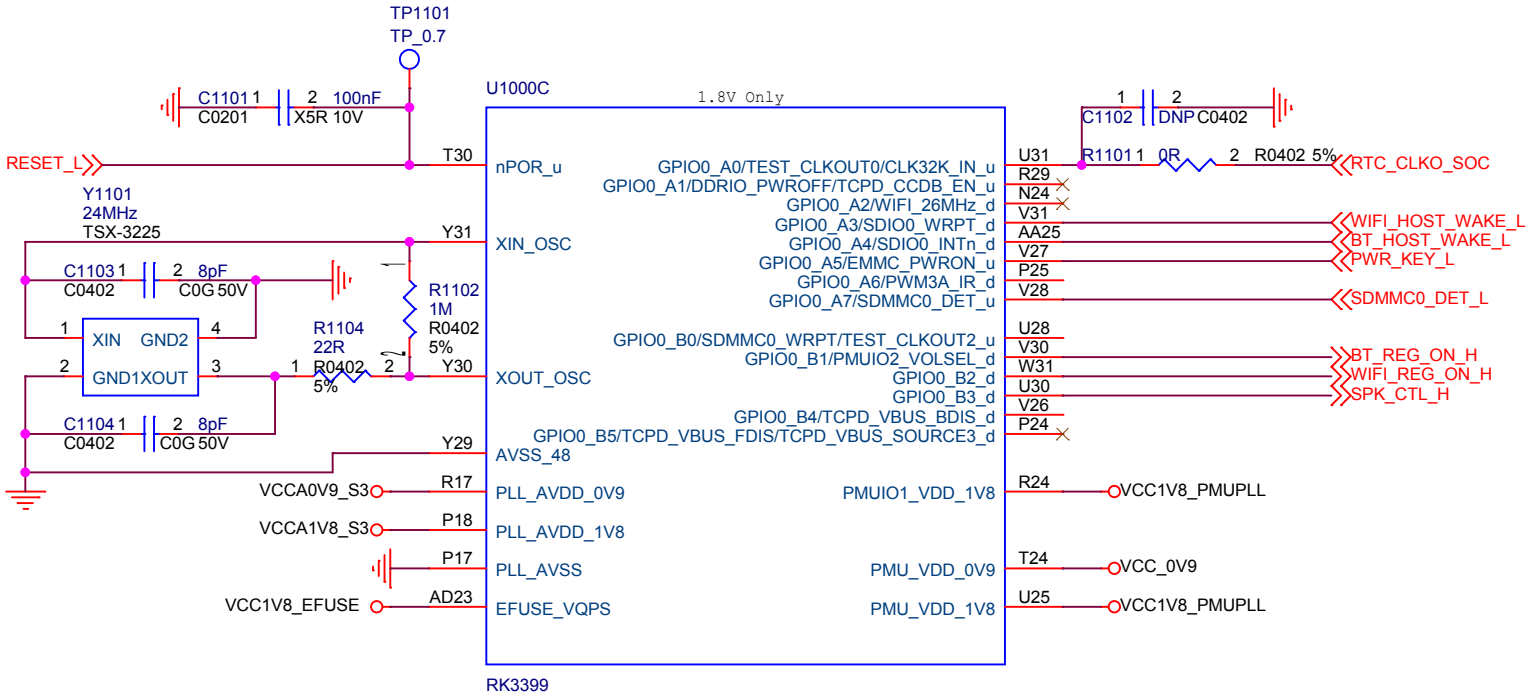


# eFUSE(option)

Note:Power for eFUSE Program,it is recommended to reserve on the tooling.It can be deleted if no need.

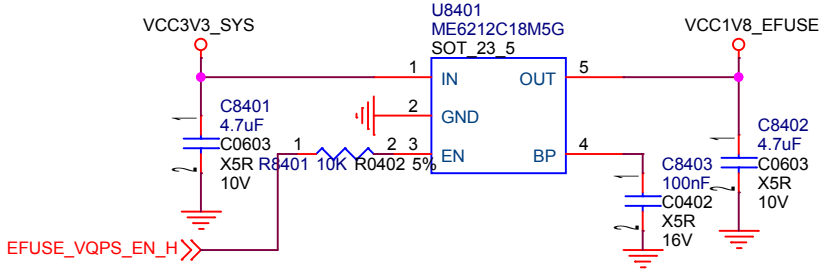


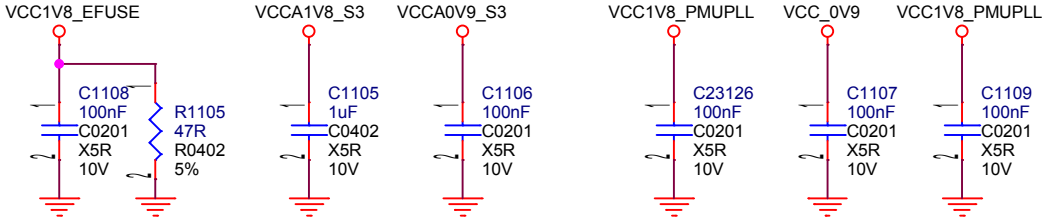


| | | |
|---|---|---|
| Xunlong Software Co.,Limited | | |
| Design Name: ORANGEPI 800 | | |
| Size: A4 | Page Name: RK3399 PMU Controler | Rev: 1.8 |
| Date: Tuesday, November 08, 2022 | Sheet 9 of 27 | |

# RK3399_A

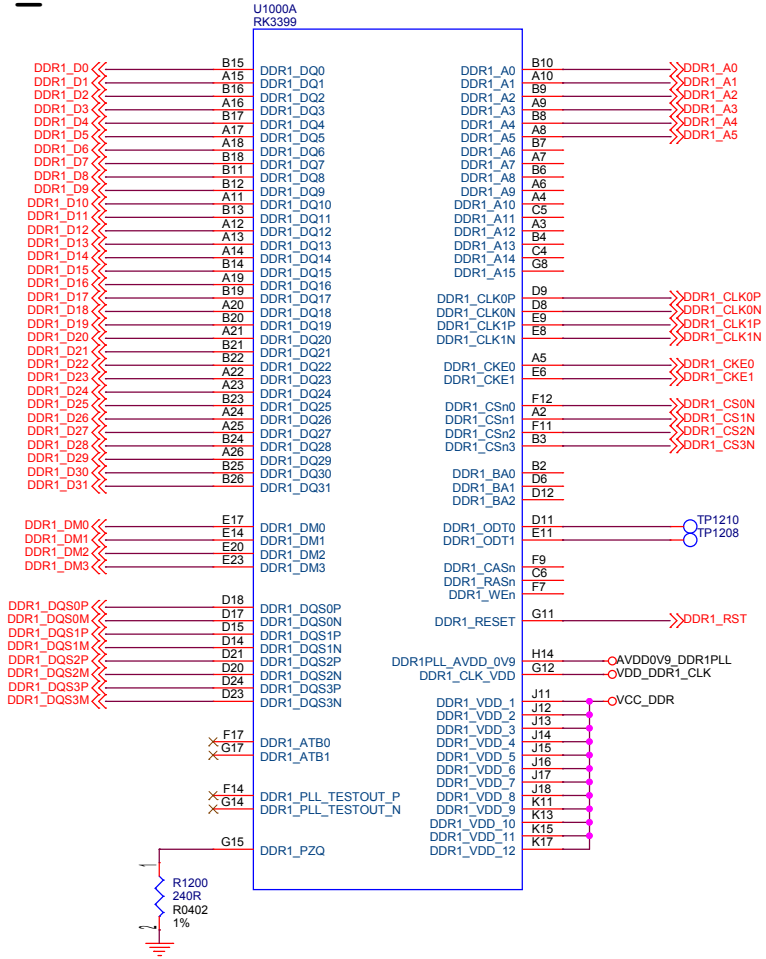


# RK3399_B

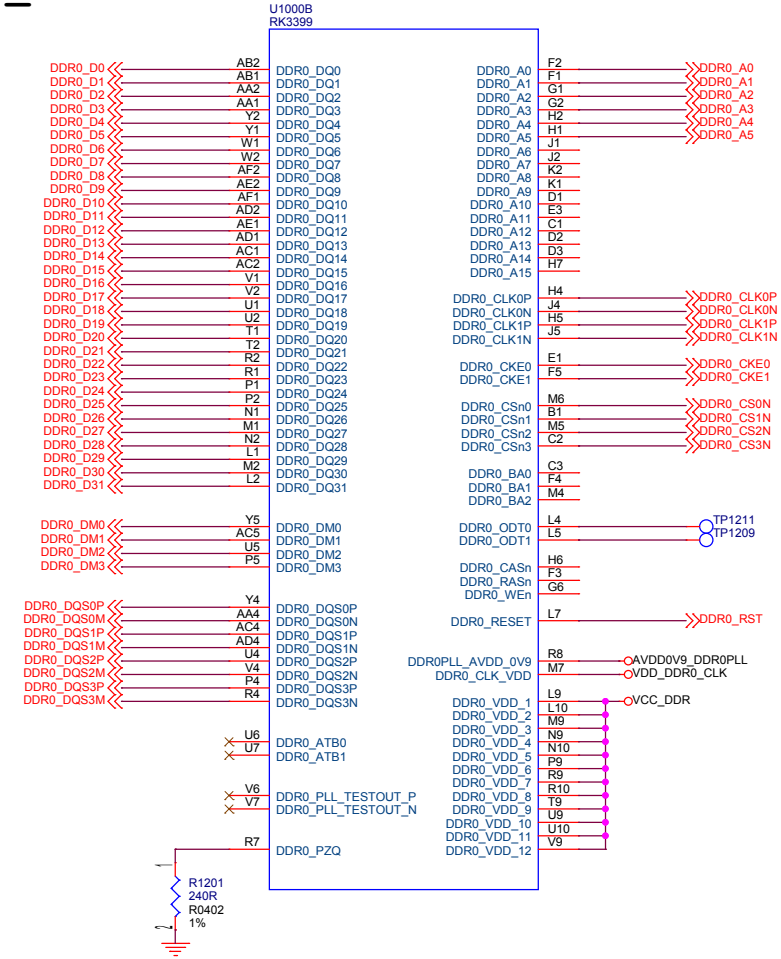


DDR FILTER

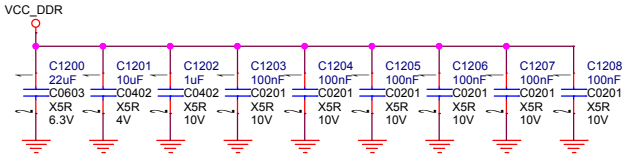


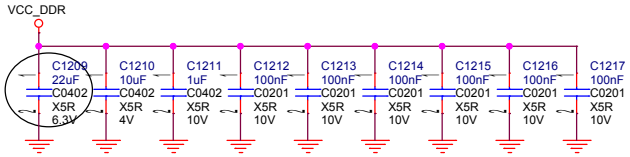


R1203和R1205 电阻不能删除。走线采用星型拓扑。
Resistors R1203 and R1205 cannot be removed. Star topology is used for routing.

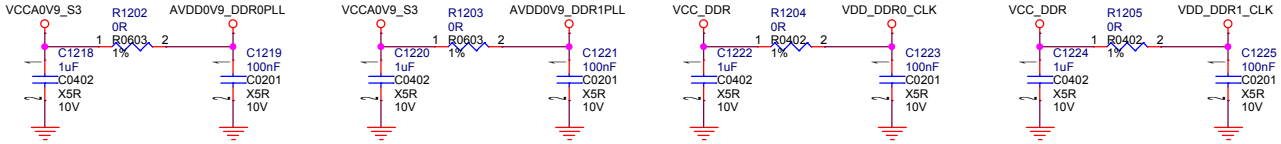


| | | |
|---|---|---|
| Xunlong Software Co.,Limited | | |
| Design Name: ORANGEPI 800 | | |
| Size: A3 | Page Name: RK3399 DDR Controler | Rev: 1.8 |
| Date: Tuesday, November 08, 2022 | Sheet 10 of 27 | |

# RK3399_H

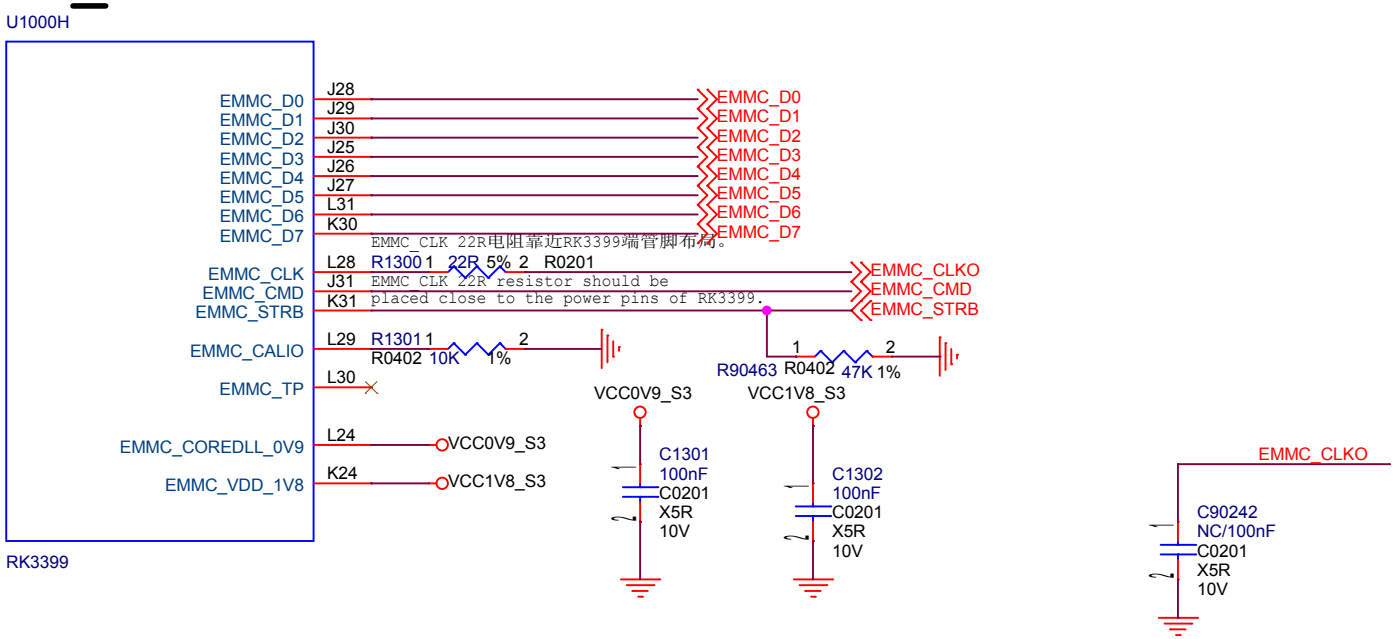


# RK3399_F

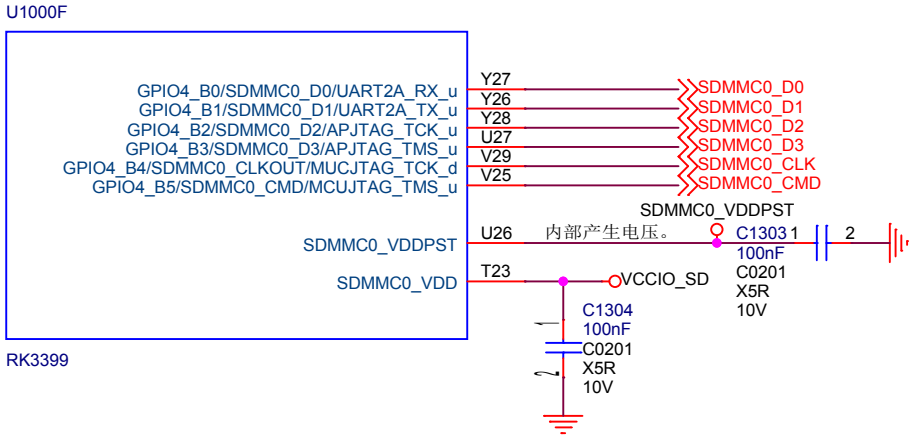


| | | | |
|---|---|---|---|
| Xunlong Software Co.,Limited | | | |
| Design Name | ORANGEPI 800 | | |
| Size A4 | Page Name | RK3399 Flash&SDMMC Controler | Rev 1.8 |
| Date: | Tuesday, November 08, 2022 | Sheet 11 of 27 | |

# RK3399_U

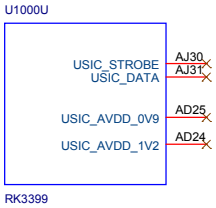


# RK3399_D

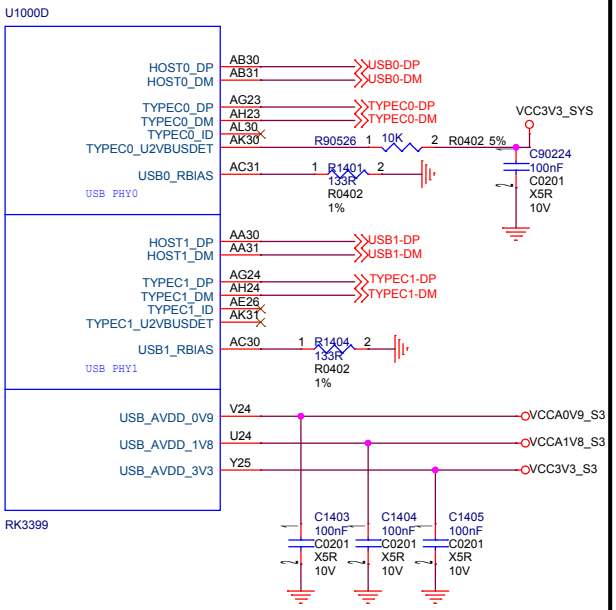


# RK3399_S

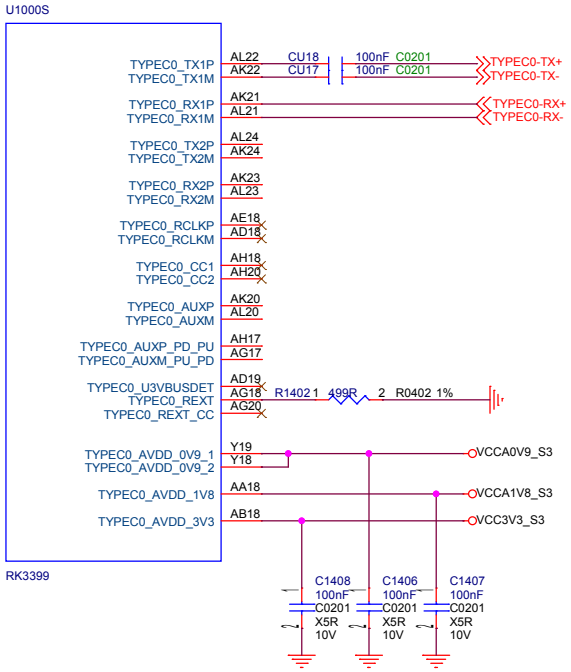


# RK3399_T

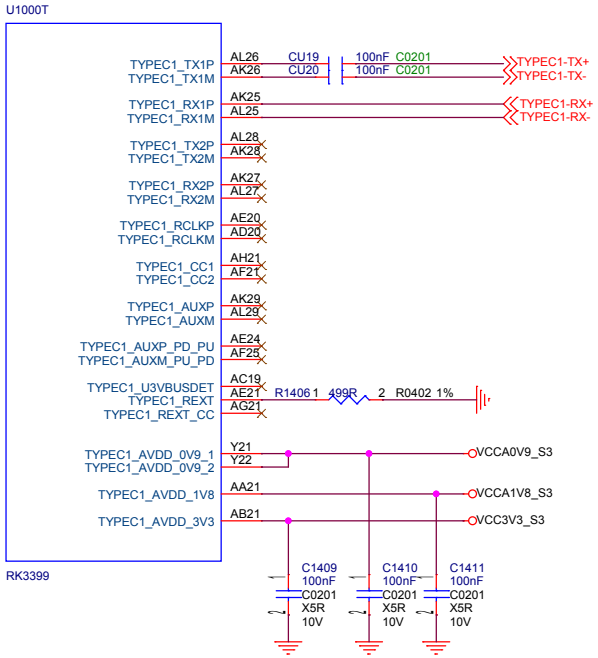


| | | | |
|---|---|---|---|
| Xunlong Software Co.,Limited | | | |
| Design Name | ORANGEPI 800 | | |
| Size A3 | Page Name RK3399 USB/USIC Controler | | Rev 1.8 |
| Date: Tuesday, November 08, 2022 | Sheet 12 of 27 | | |

# RK3399_V

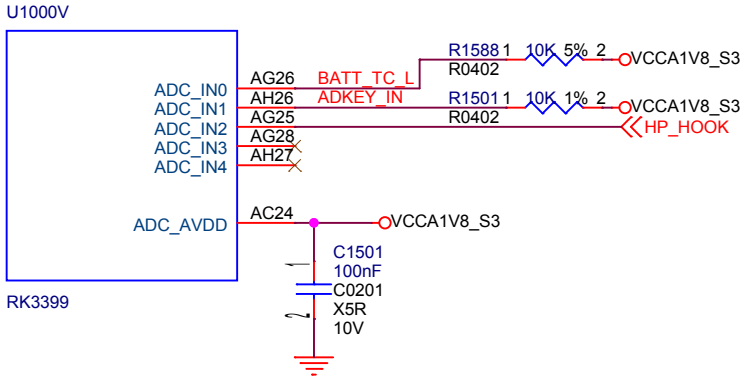


Note:All the Power filter capacitors should be placed close to the power pins of RK3399

# RK3399_O

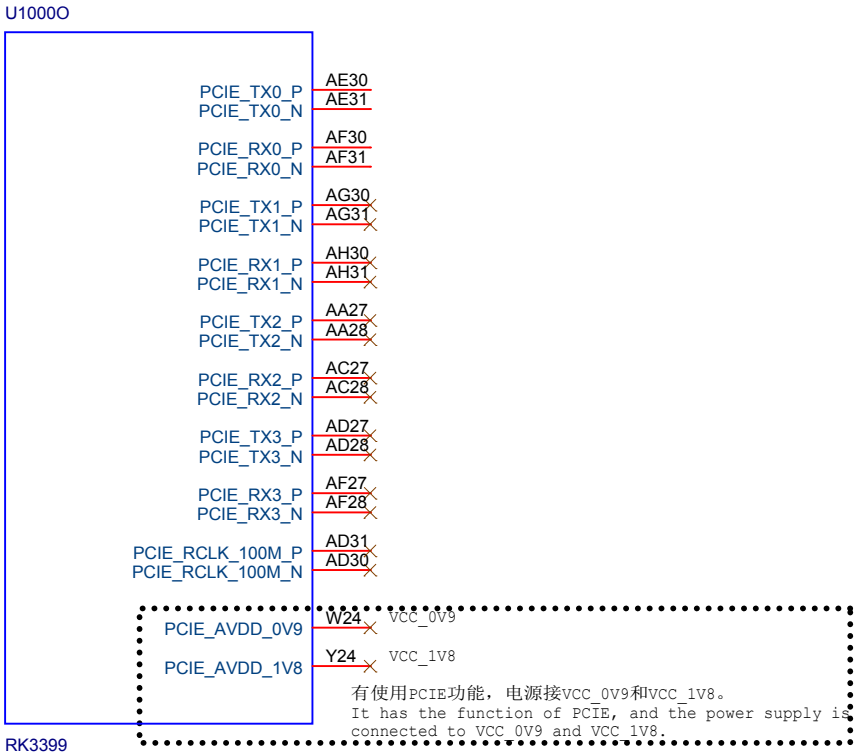


| | | |
|---|---|---|
| Xunlong Software Co.,Limited | | |
| Design Name: ORANGEPI 800 | | |
| Size: A4 | Page Name: .RK3399 SARADC/keyBoard | Rev: 1.8 |
| Date: Tuesday, November 08, 2022 | Sheet 13 of 27 | |

# RK3399_L

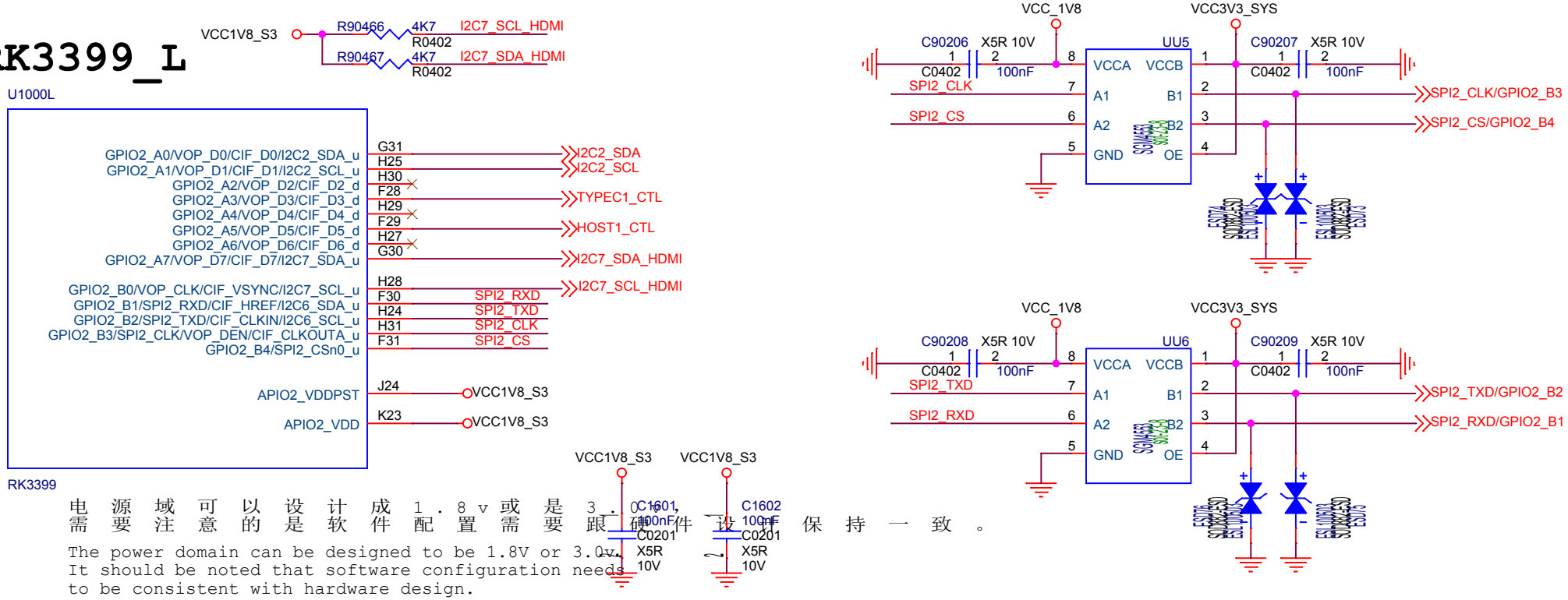


电源域可以设计成1.8v或是3.0v，
需要注意的是软件配置需要跟硬件设计保持一致。

The power domain can be designed to be 1.8V or 3.0v.
It should be noted that software configuration needs
to be consistent with hardware design.

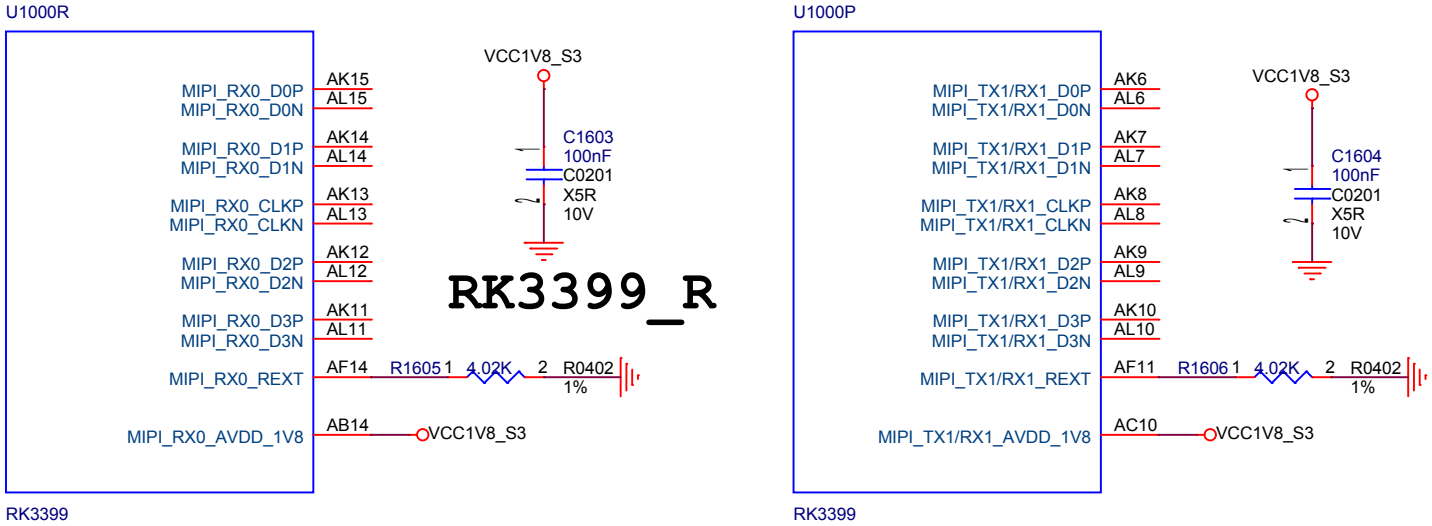


# RK3399_R

# RK3399_P

MIPI_RX0同时接HDMI-IN和MIPI Camera，实际产品应能使用
MIPI PHY可以有如下几种组合：
1、MIPI_RX0和MIPI_TX1/RX1分别接MIPI Camera；
2、MIPI_RX0接HDMI-IN，
MIPI_TX1/RX1接MIPI Camera；
3、MIPI_TX0接单MIPI显示屏，或是跟MIPI_TX1/RX1结合接双MIPI显示屏；
MIPI_RX0接MIPI Camera；

| | | |
|---|---|---|
| Xunlong Software Co.,Limited | | |
| Design Name: ORANGEPI 800 | | |
| Size: A4 | Page Name: RK3399 DVP Interface | Rev: 1.8 |
| Date: Tuesday, November 08, 2022 | Sheet 14 of 27 | |

# RK3399_N

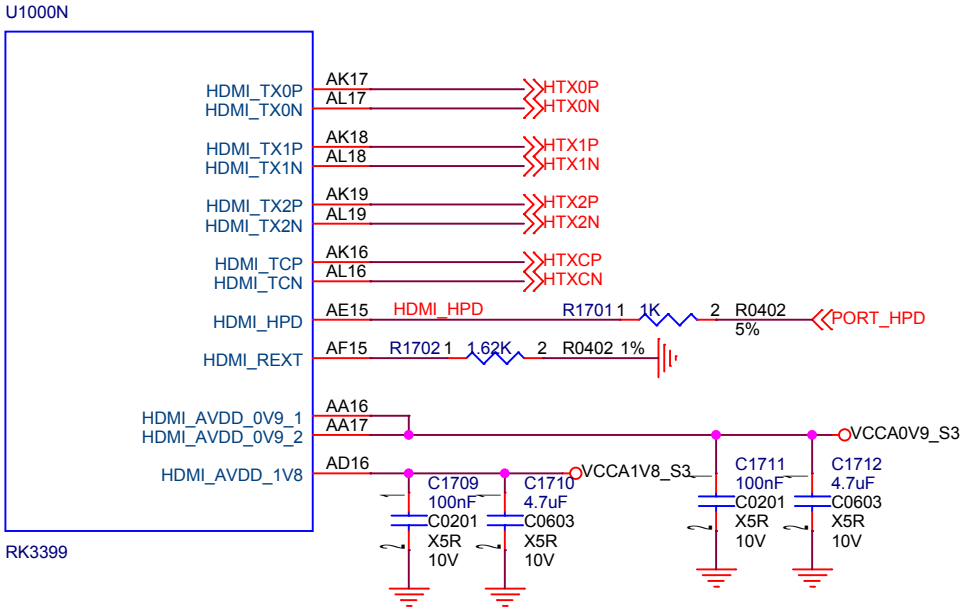


# RK3399_M

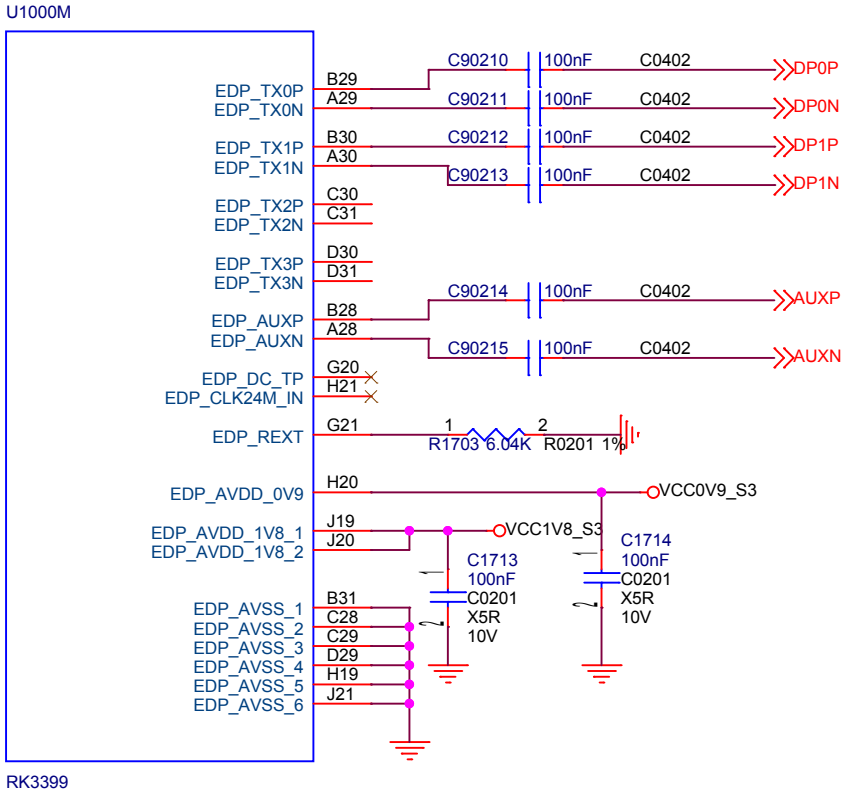


# RK3399_Q

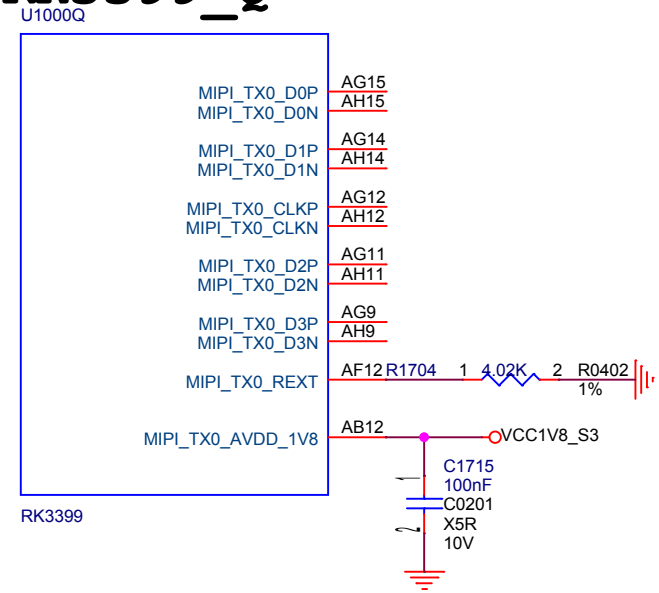


| | | |
|---|---|---|
| Xunlong Software Co.,Limited | | |
| Design Name: ORANGEPI 800 | | |
| Size: A4 | Page Name: RK3399 Display Interface | Rev: 1.8 |
| Date: Tuesday, November 08, 2022 | Sheet 15 of 27 | |

# RK3399_I

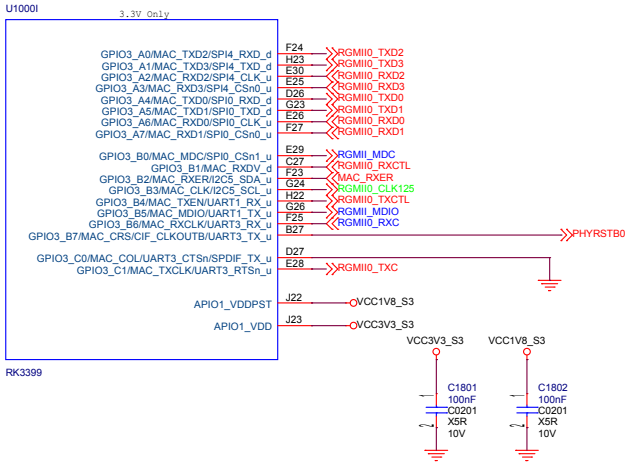


# RK3399_E

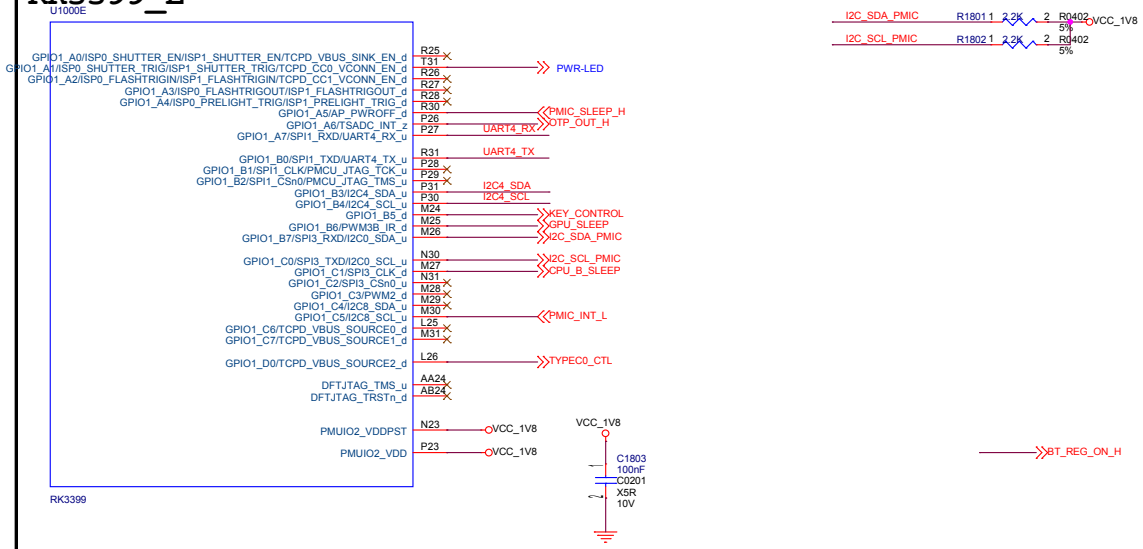


# RK3399_G

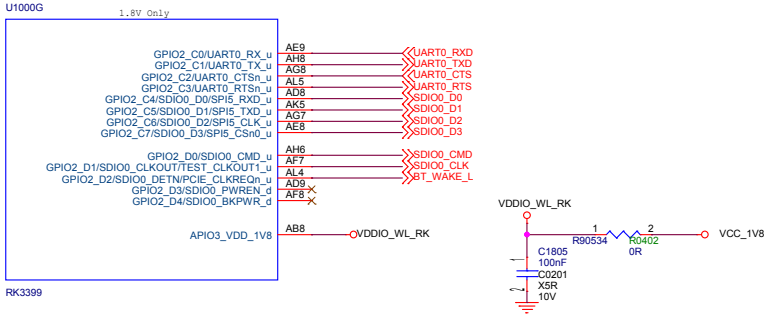


# RK3399_K

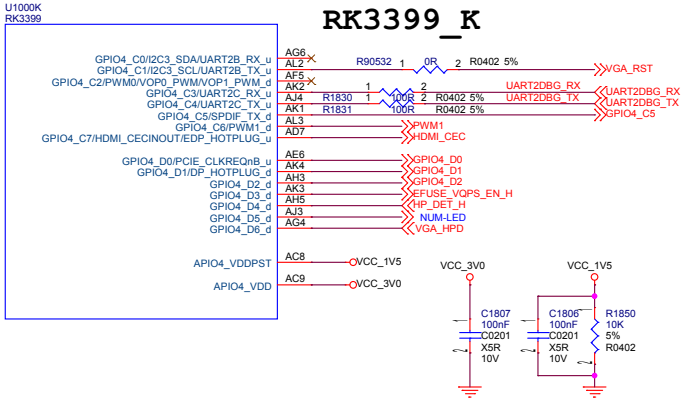


# RK3399_J

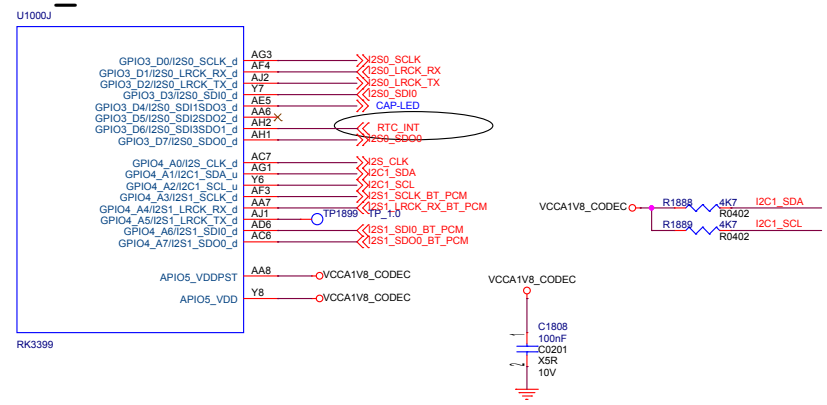


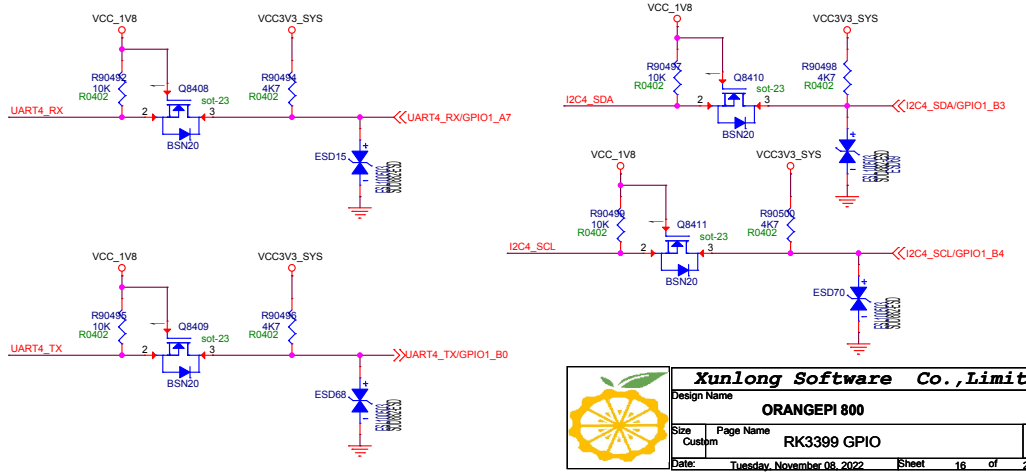


| | | | |
|---|---|---|---|
| Xunlong Software Co.,Limited | | | |
| Design Name | ORANGEPI 800 | | |
| Size Custom | Page Name RK3399 GPIO | | Rev 1.8 |
| Date: Tuesday, November 08, 2022 | Sheet 16 of 27 | | |

# DC-5V/3A TPYE-C

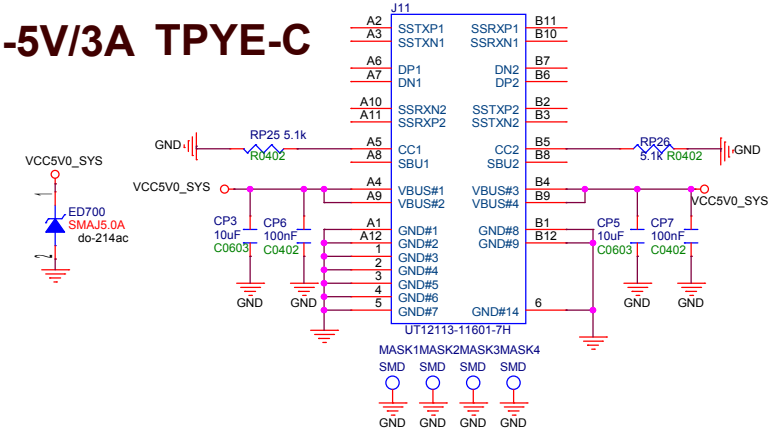


# VCC3V3_SYS

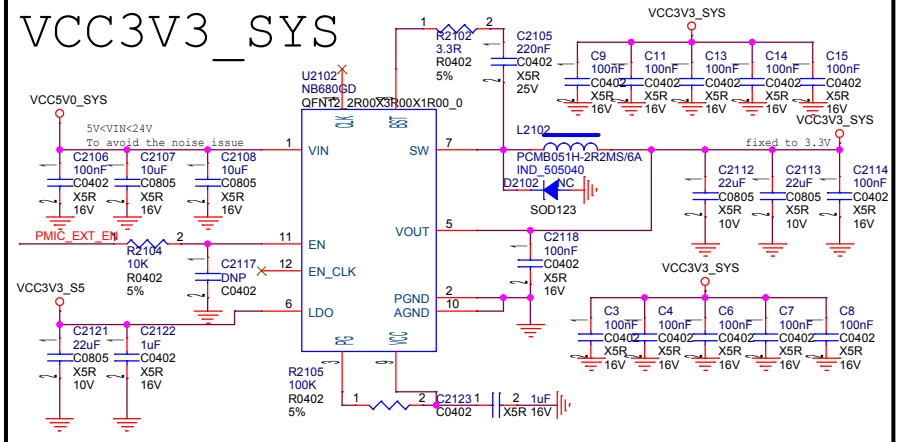


如 下 电 源 反 馈 信 号 的 走 线

1、 VDD_CPU_L
2、 VDD_CENTER
3、 VCC_DDR
4、 VDD_CPU_B
5、 VDD_GPU
6、 VDD_LOG

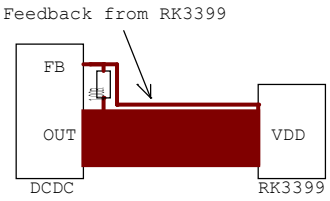


# PMIC RK808-D

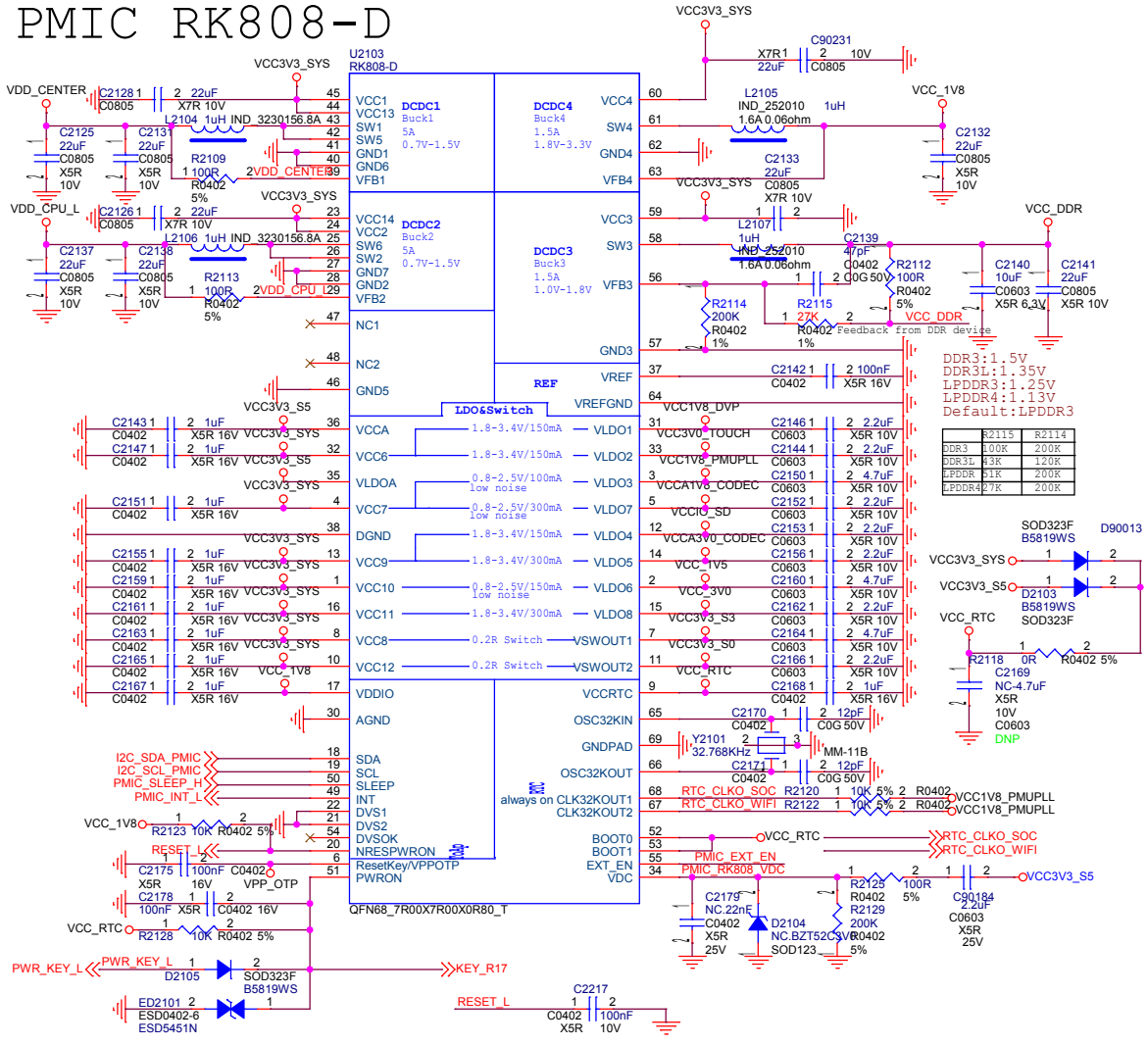


# VDD_GPU

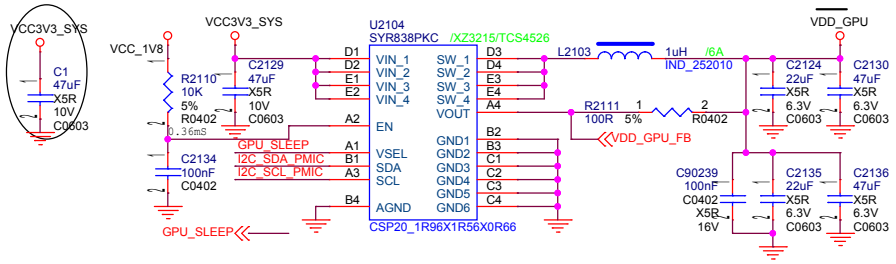


# VDD_CPU_B

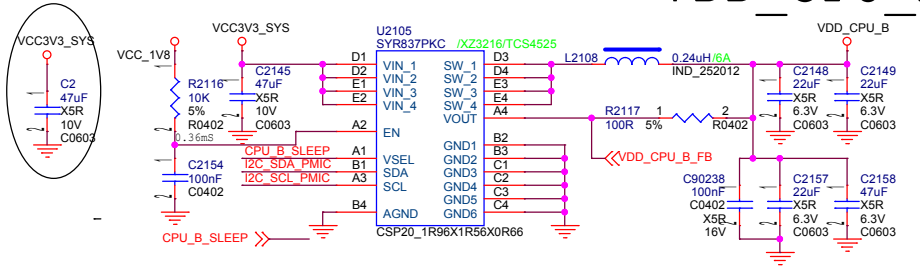


# VDD_LOG

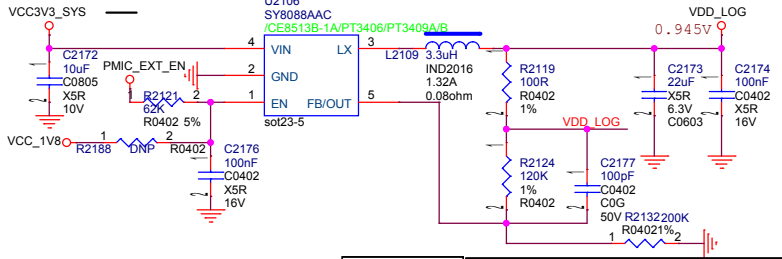


| Xunlong Software Co.,Limited | | |
|---|---|---|
| Design Name | ORANGEPI 800 | |
| Size A3 | Page Name Power1-RK808-D | Rev 1.8 |
| Date: Tuesday, November 08, 2022 | Sheet 17 of 27 | |

# VCC_0V9

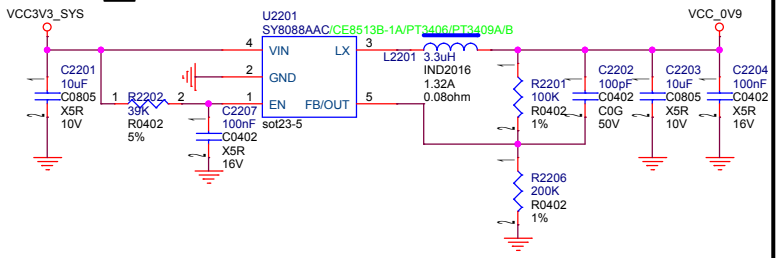


# VCCA1V8_S3

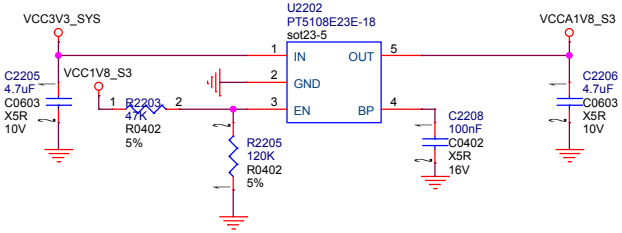


# VCCA0V9_S3

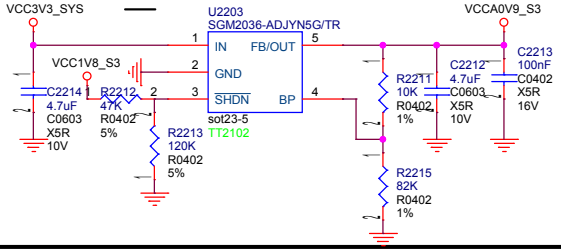


# VCC3V0_SD

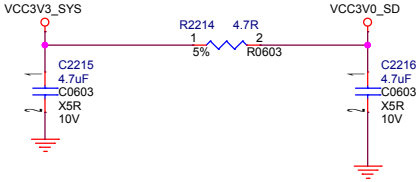


# VCC1V8_S3

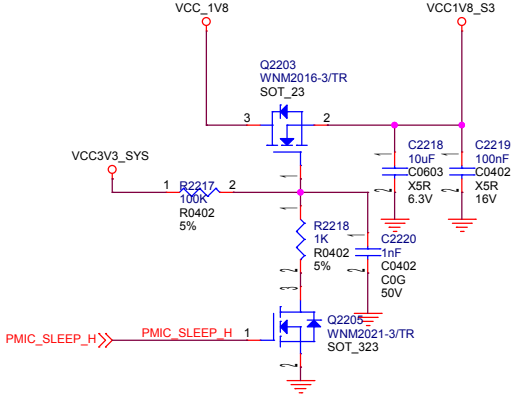


# VCC0V9_S3

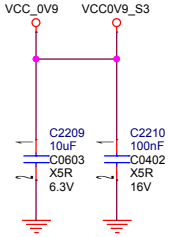


# Over-temperature Protection

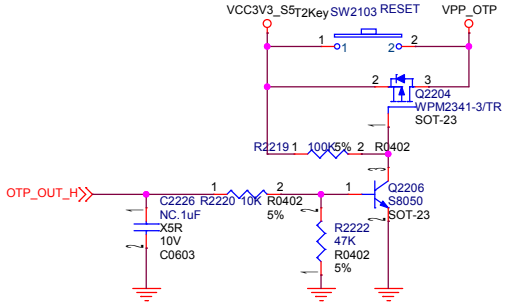


| | | |
|---|---|---|
| Xunlong Software Co.,Limited | | |
| Design Name: ORANGEPI 800 | | |
| Size: A3 | Page Name: Power2-RK808-D | Rev: 1.8 |
| Date: Tuesday, November 08, 2022 | Sheet 18 of 27 | |

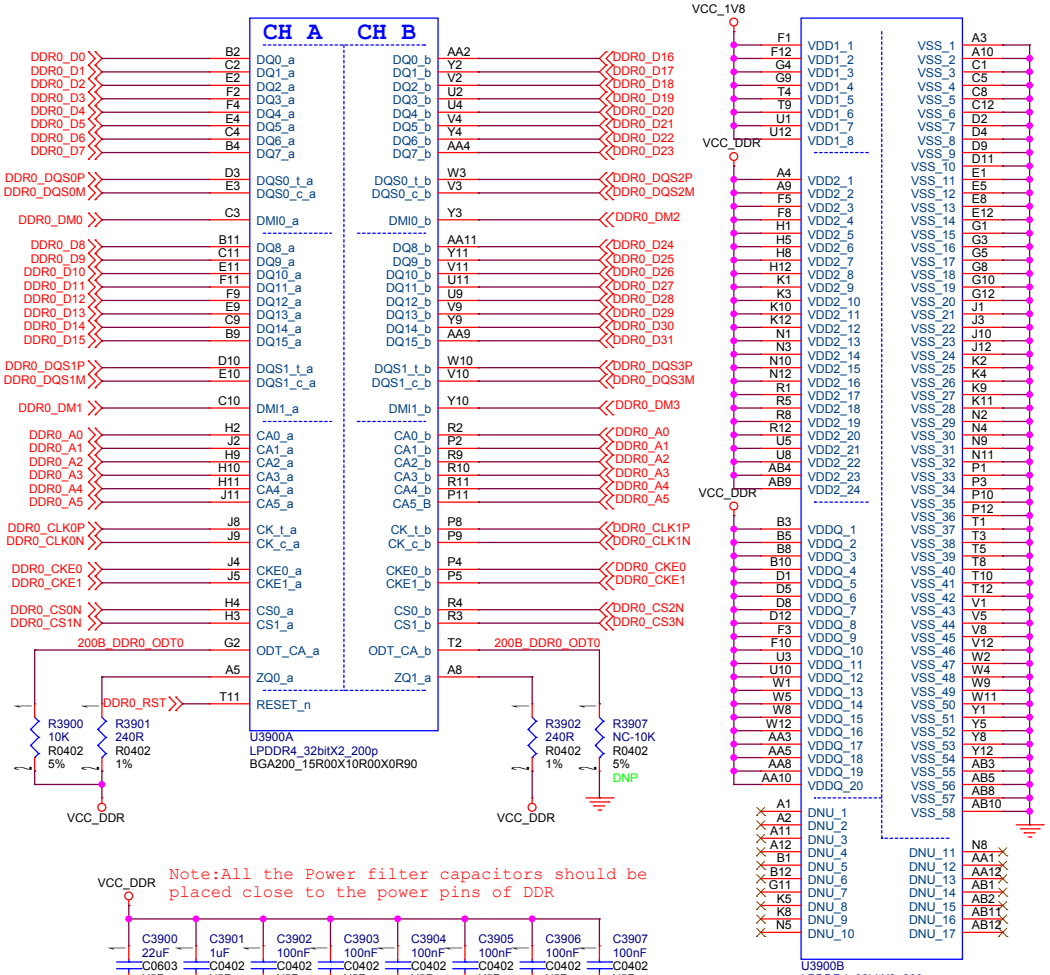


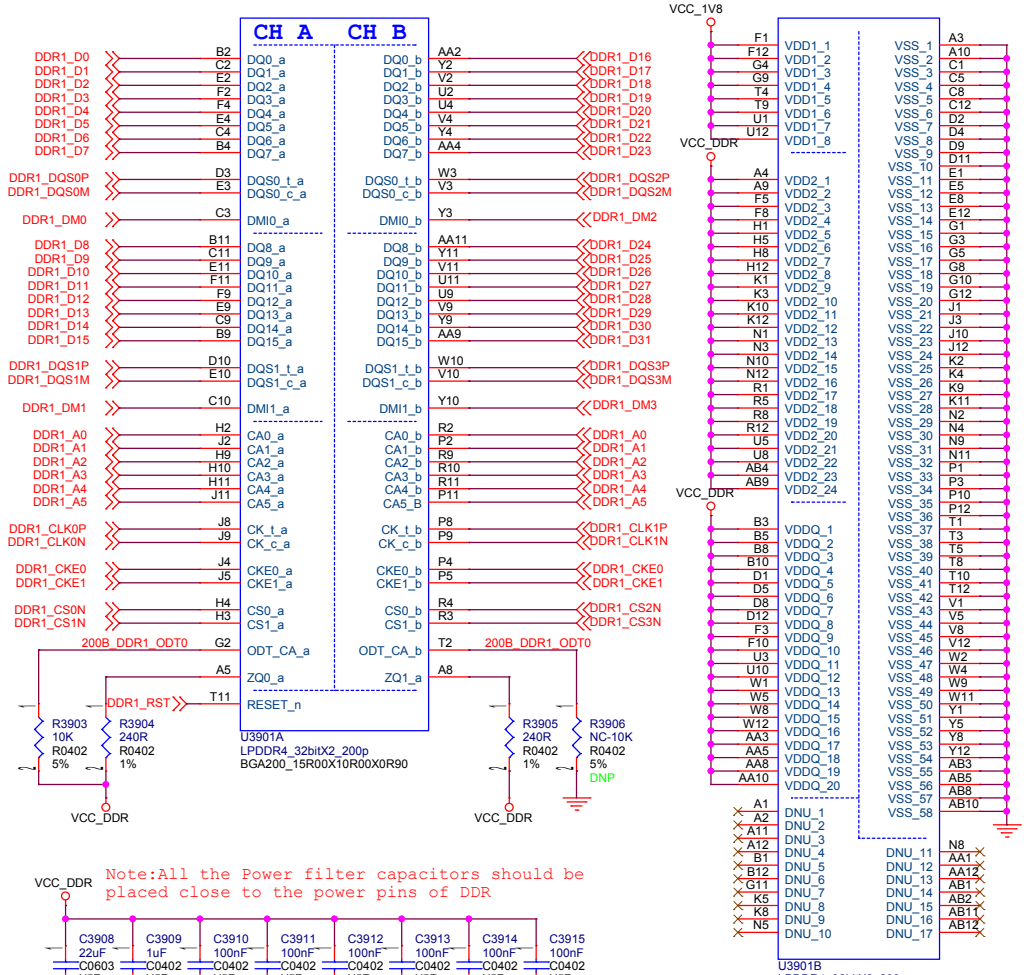


Note:All the Power filter capacitors should be placed close to the power pins of DDR

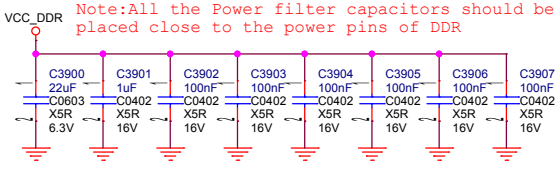


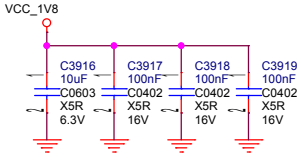


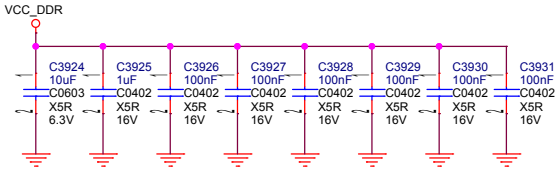


Note:All the Power filter capacitors should be placed close to the power pins of DDR

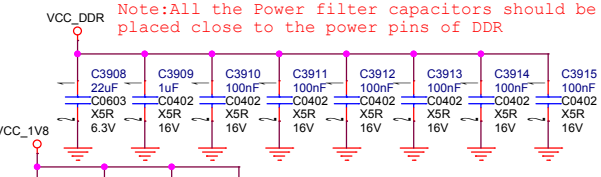


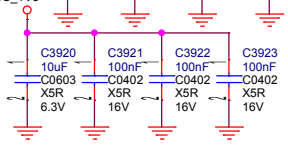


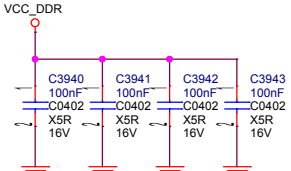


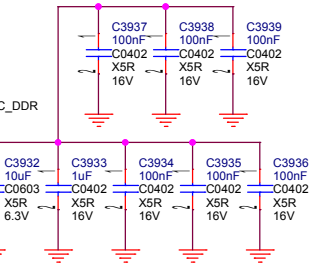


| | | | |
|---|---|---|---|
| Xunlong Software Co.,Limited | | | |
| Design Name: ORANGEPI 800 | | | |
| Size: A3 | Page Name: RAM-LPDDR4(200P) | | Rev: 1.8 |
| Date: Tuesday, November 08, 2022 | Sheet 19 of 27 | | |

# eMMC FLASH

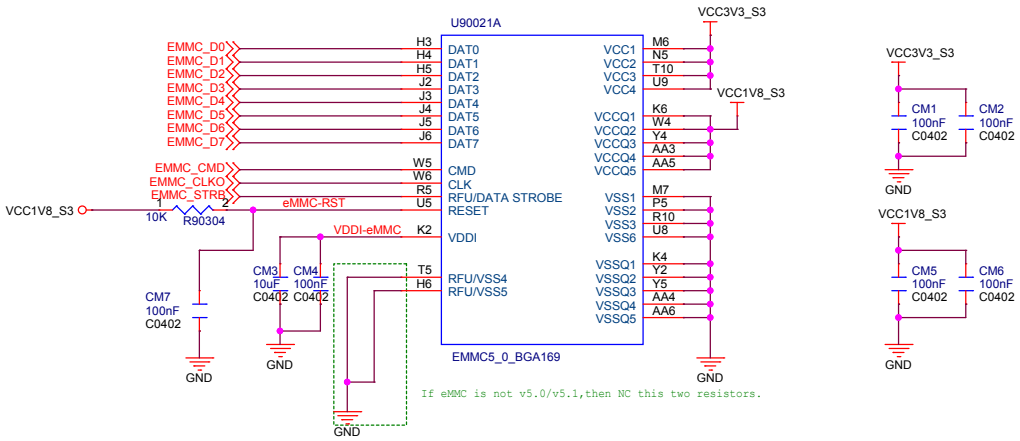


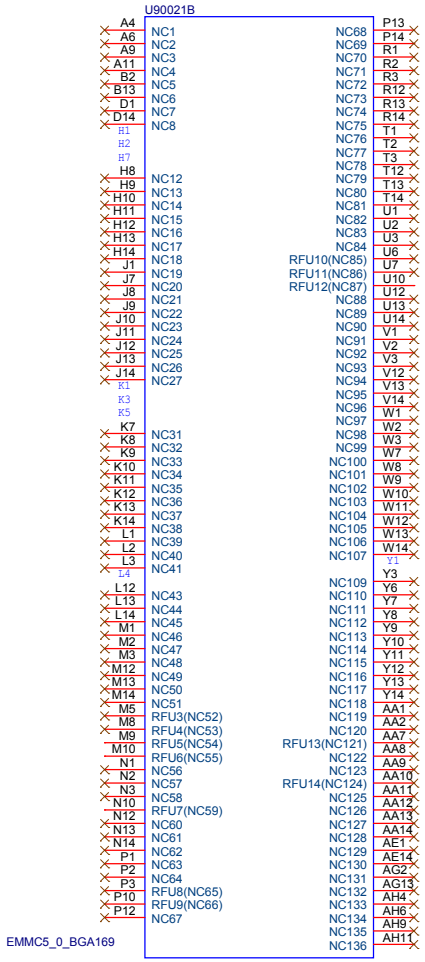


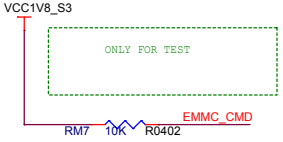


Note:All the Power filter capacitors should be placed close to the power pins of eMMC

Note:
Reserve TestPoint for firmware update.
If EMMC_CLKO=0V at power-on reset,
then system will enter into Maskrom mode.

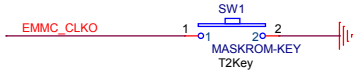


| | | |
|---|---|---|
| Xunlong Software Co.,Limited | | |
| Design Name: ORANGEPI 800 | | |
| Size: A3 | Page Name: eMMC | Rev: 1.8 |
| Date: Tuesday, November 08, 2022 | Sheet 20 of 27 | |

# WIFI/WIFI ac/BT MODULE

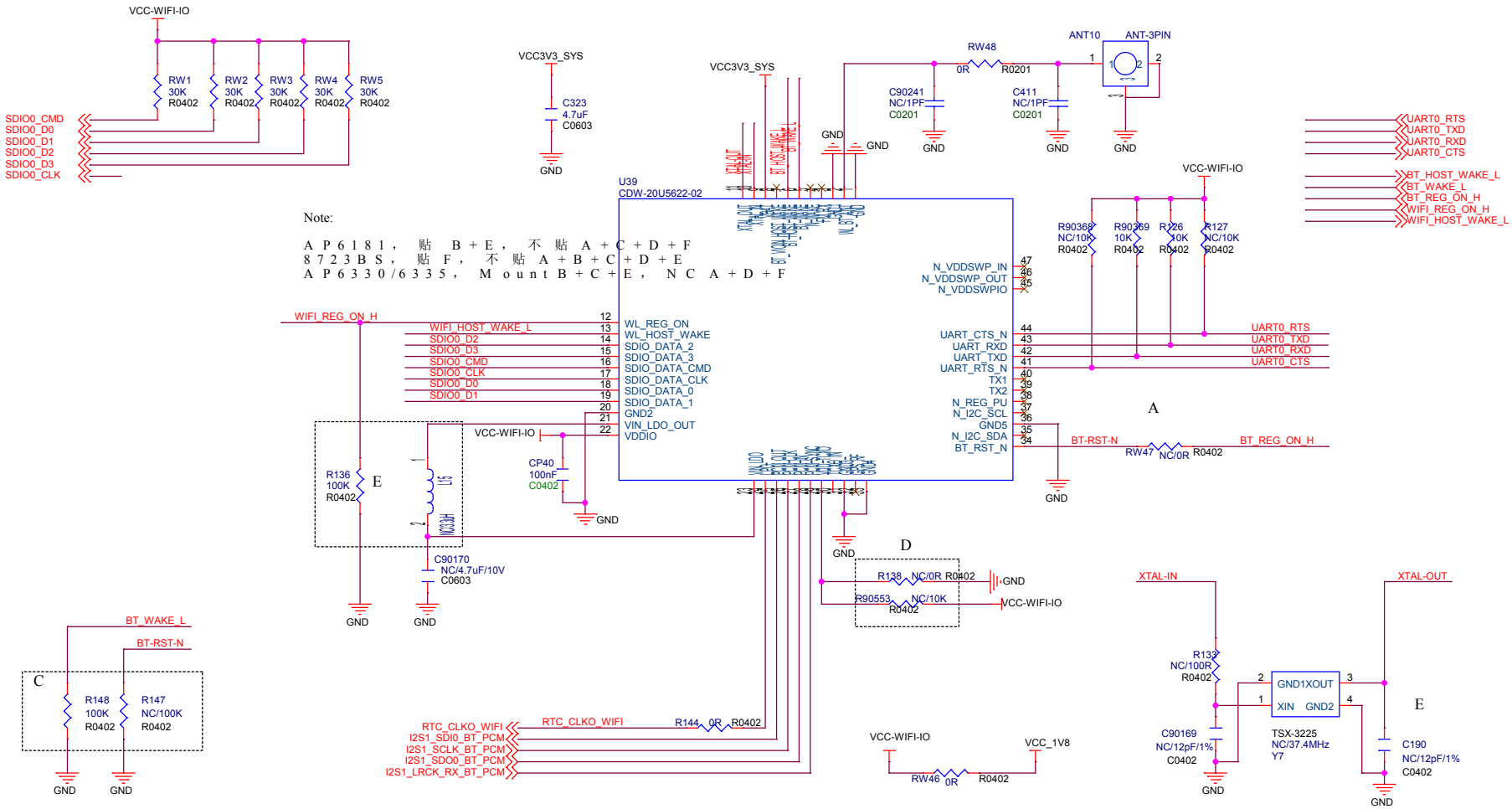


| | | |
|---|---|---|
| Xunlong Software Co.,Limited | | |
| Design Name | ORANGEPI 800 | |
| Size A3 | Page Name WIFI AP6256 | Rev 1.8 |
| Date: Tuesday, November 08, 2022 | Sheet 21 of 27 | |

# I2S TO MIC

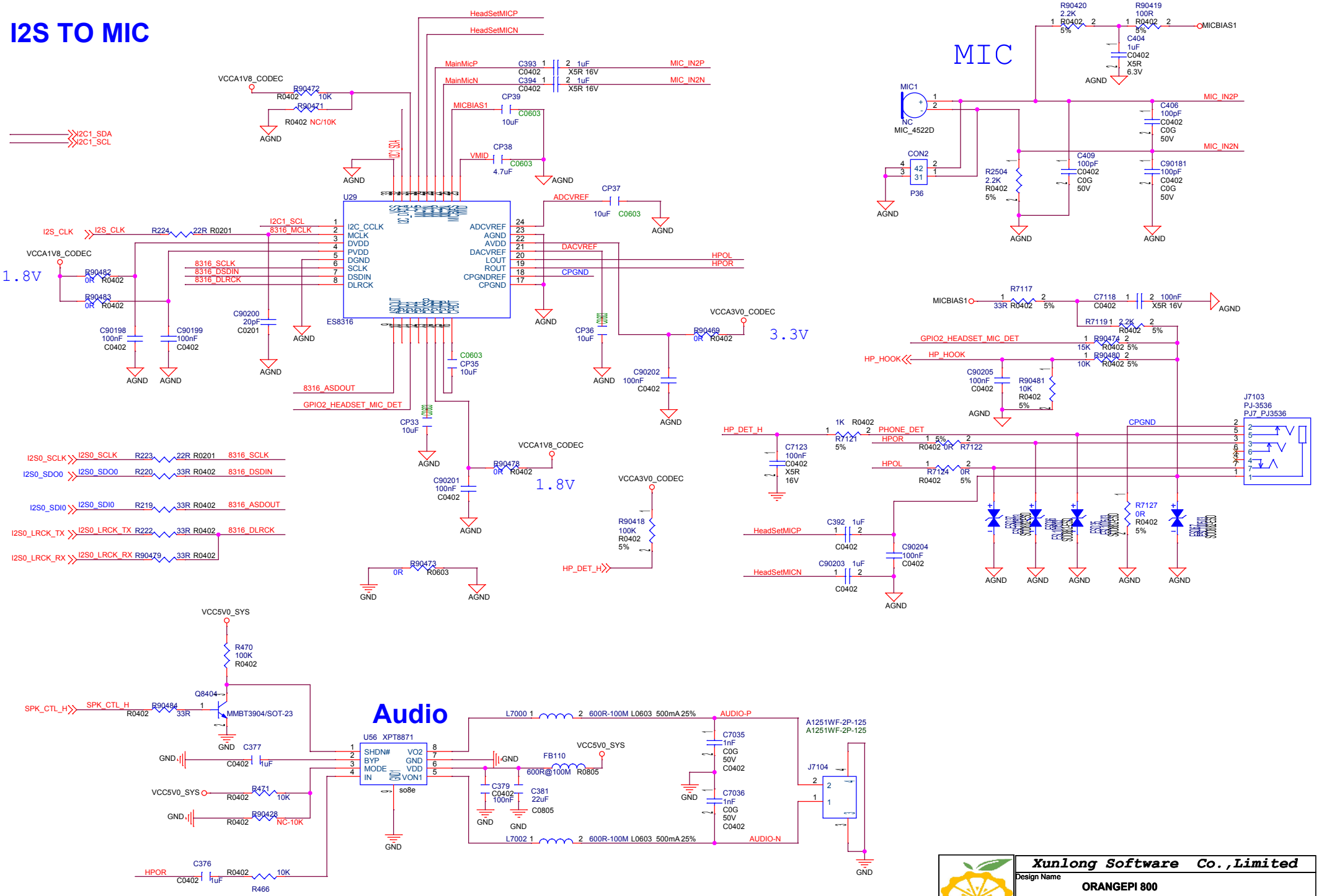


| | |
|---|---|
| Xunlong Software Co.,Limited | |
| Design Name | ORANGEPI 800 |
| Size A3 | Page Name Audio Codec-ES8316 |
| Rev 1.8 | |
| Date: Tuesday, November 08, 2022 | Sheet 22 of 27 |

# 1000M ETH

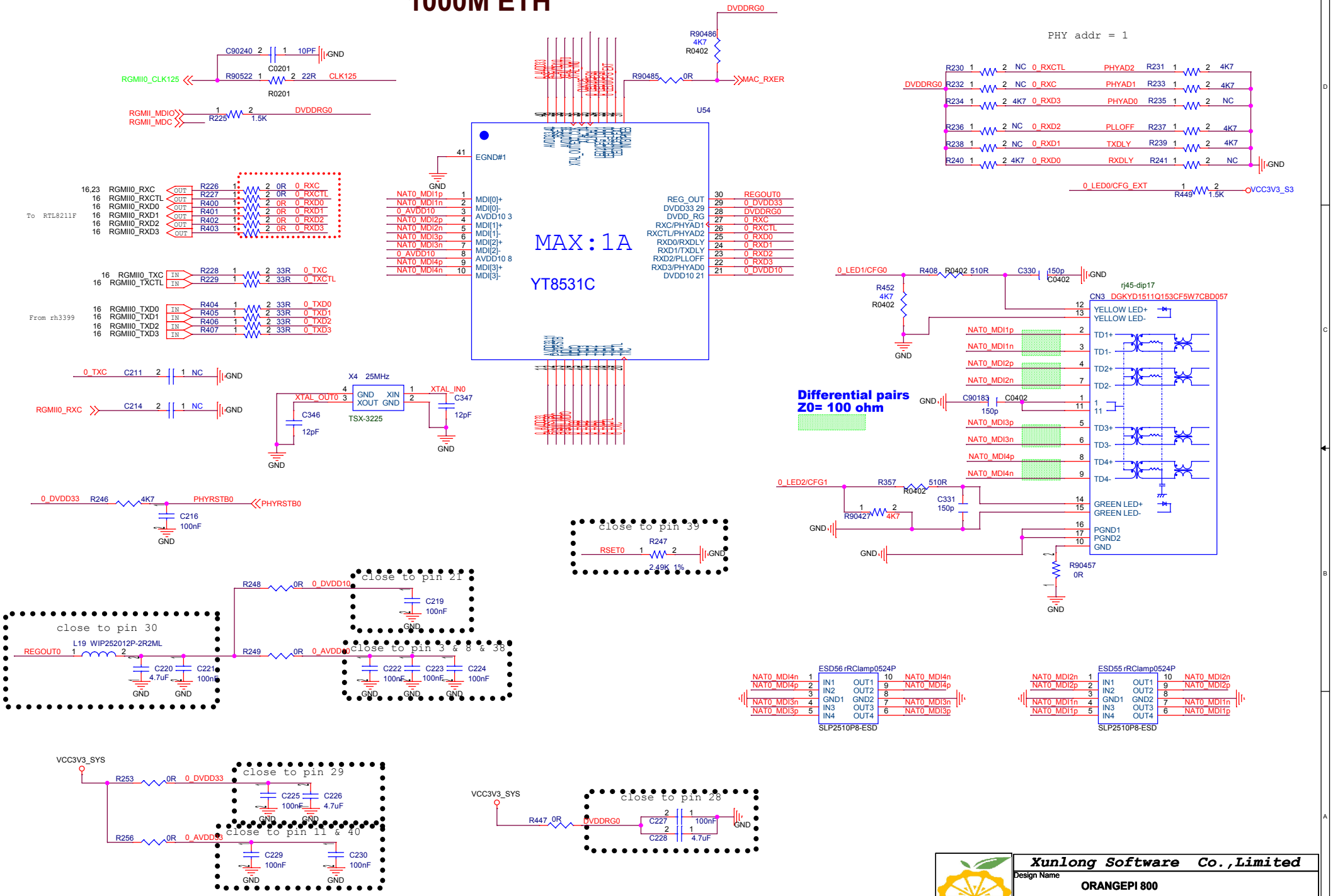


| | |
|---|---|
| Xunlong Software Co.,Limited | |
| Design Name | ORANGEPI 800 |
| Size A3 | Page Name 1000M ETH |
| Rev 1.8 | |
| Date: Tuesday, November 08, 2022 | Sheet 23 of 27 |

# HDMI

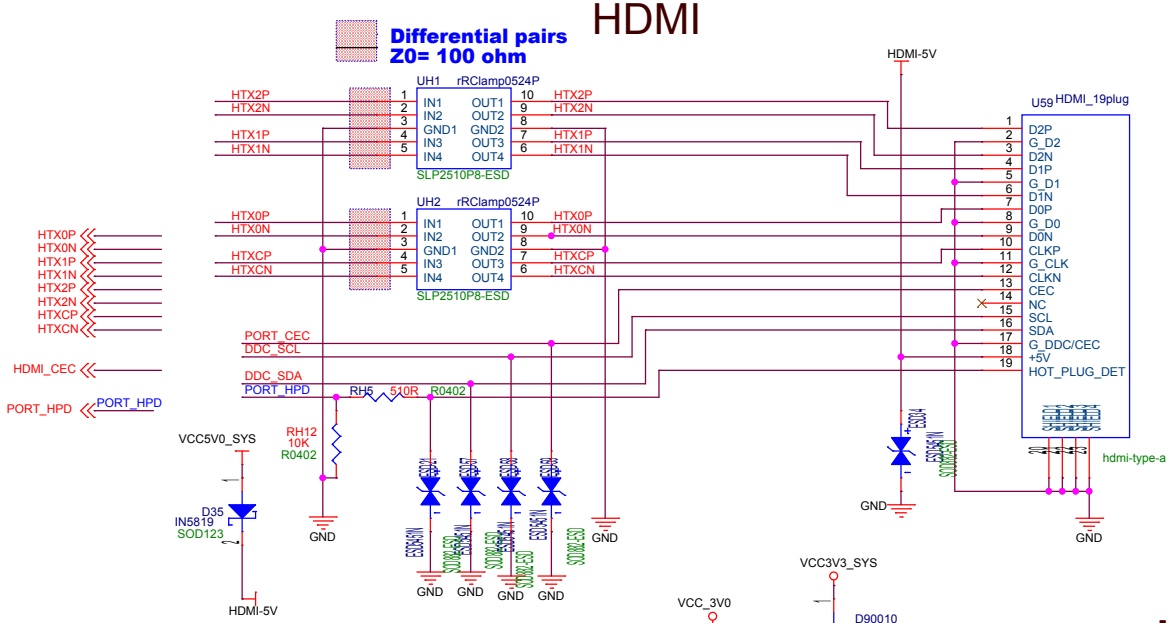


# TF CARD

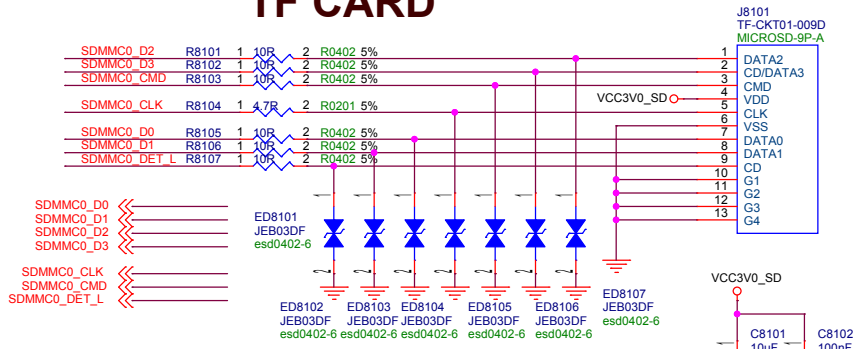


# LED

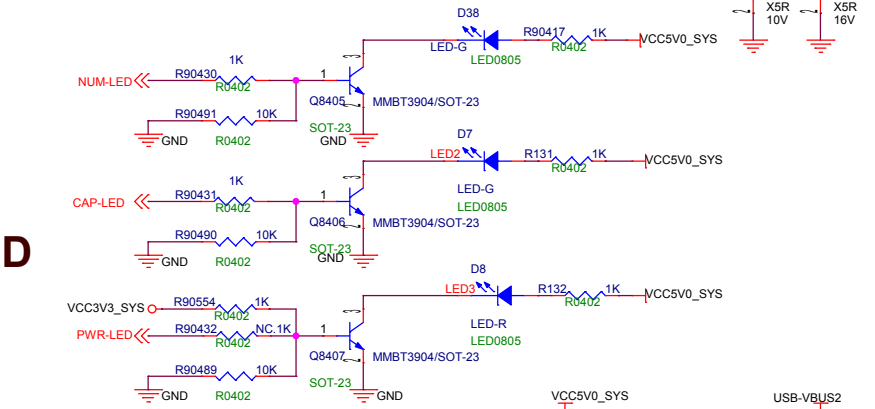


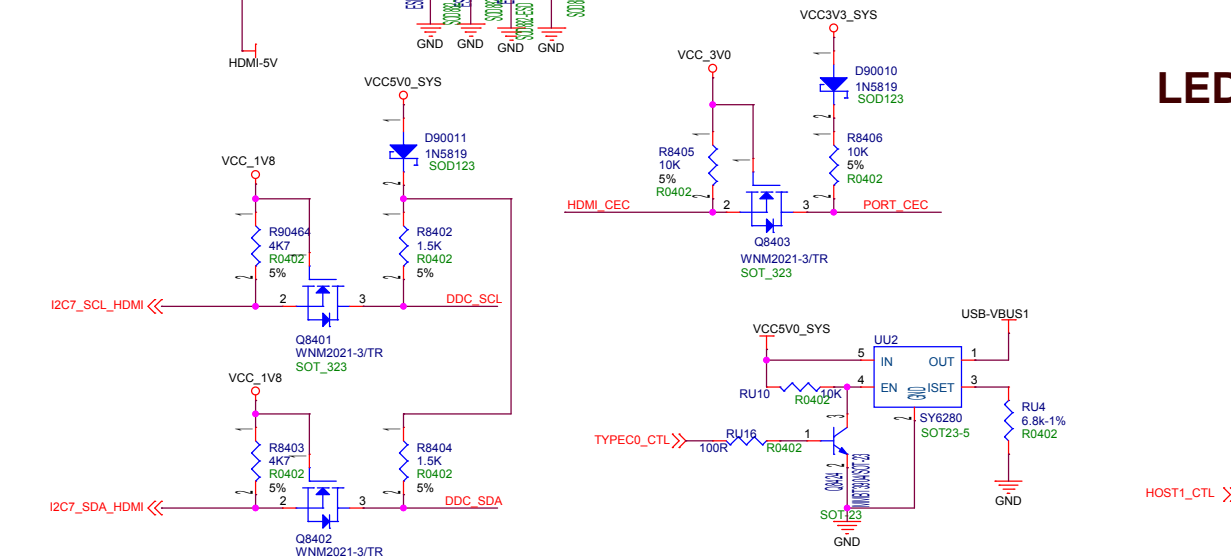


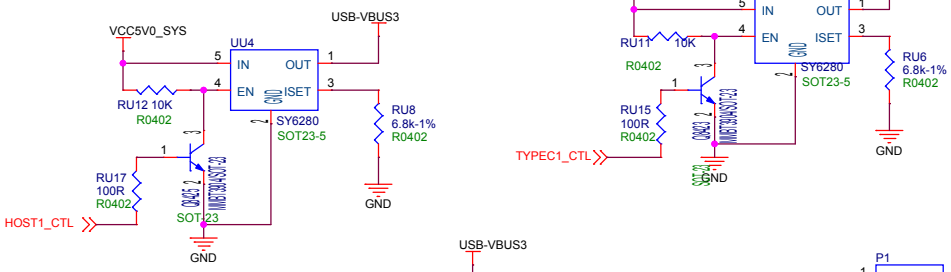


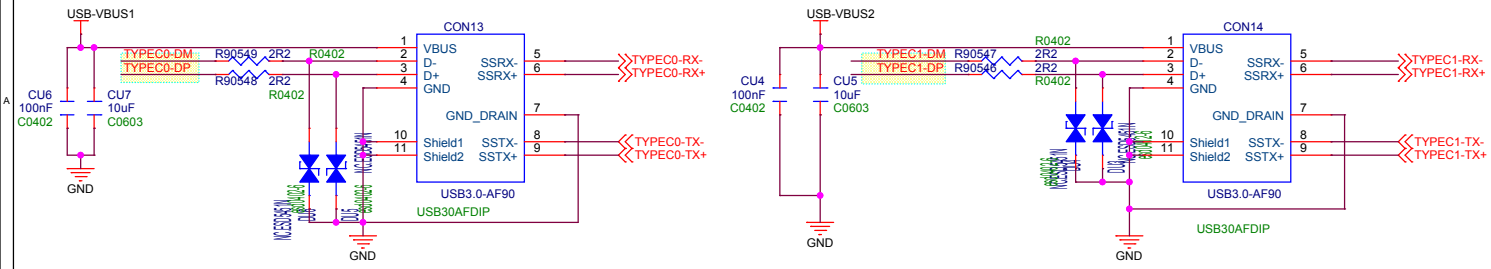


| | | |
|---|---|---|
| Xunlong Software Co.,Limited | | |
| Design Name: ORANGEPI 800 | | |
| Size: A3 | Page Name: CARD-USB-DEBUG-usb2.0-HDMI | Rev: 1.8 |
| Date: Tuesday, November 08, 2022 | Sheet 24 of 27 | |

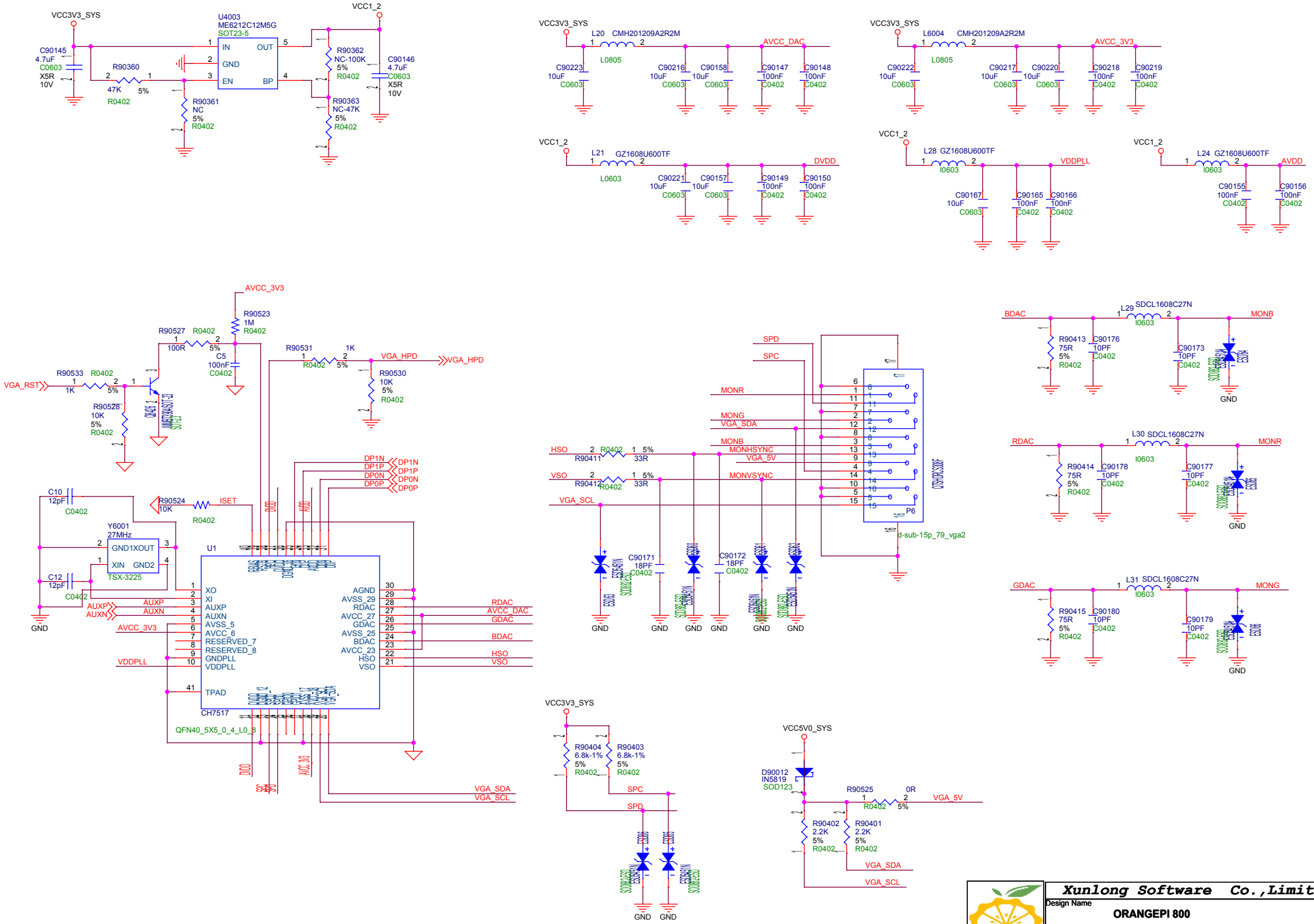


| | | |
|---|---|---|
| Xunlong Software Co.,Limited | | |
| Design Name | ORANGEPI 800 | |
| Size A3 | Page Name eDP TO VGA | Rev 1.8 |
| Date: Tuesday, November 08, 2022 | Sheet 25 of 27 | |

# 26 PIN CONNECTOR

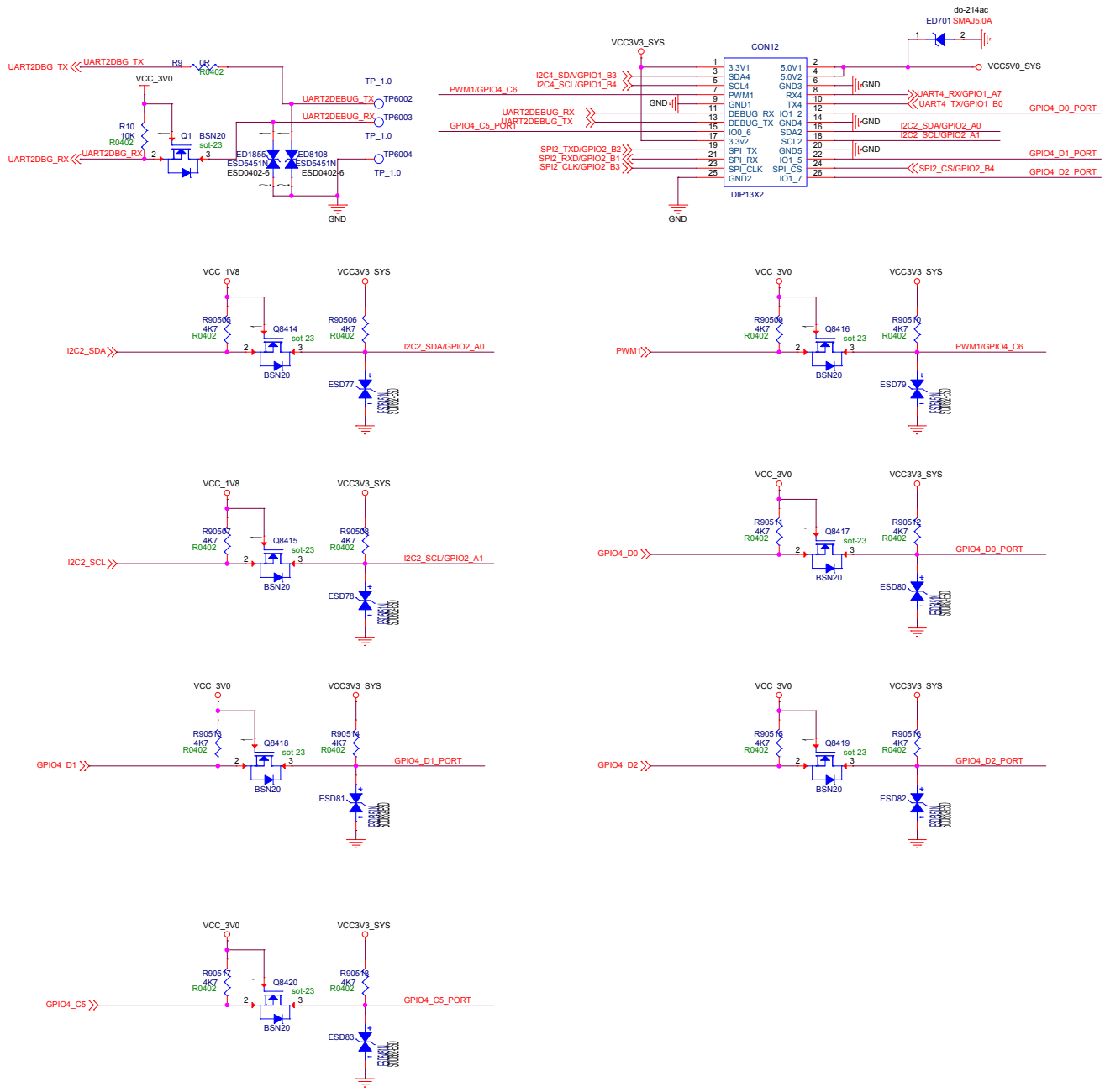


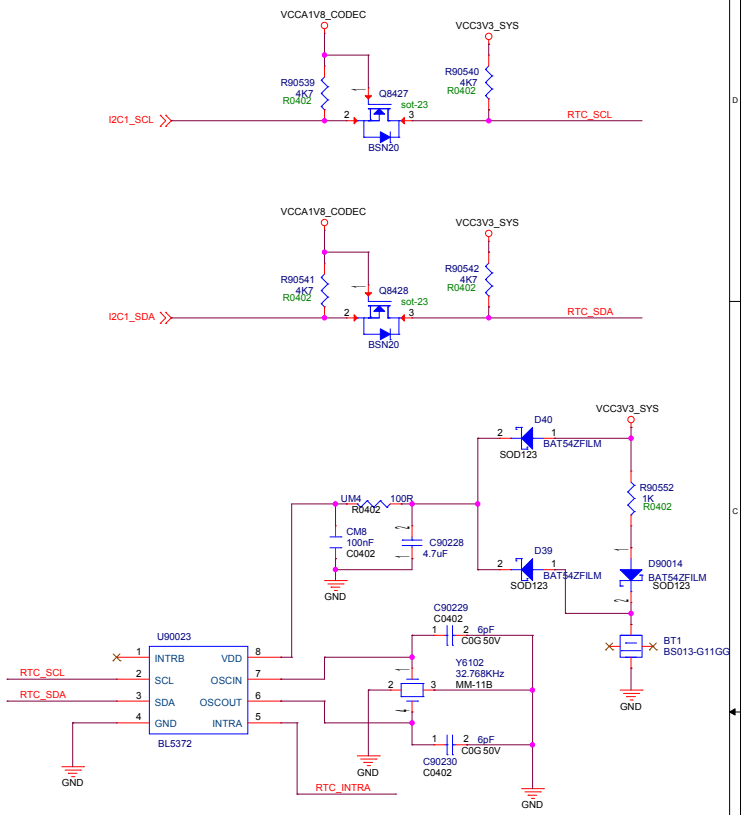


0725

| Xunlong Software Co.,Limited | |
|---|---|
| Design Name | ORANGEPI 800 |

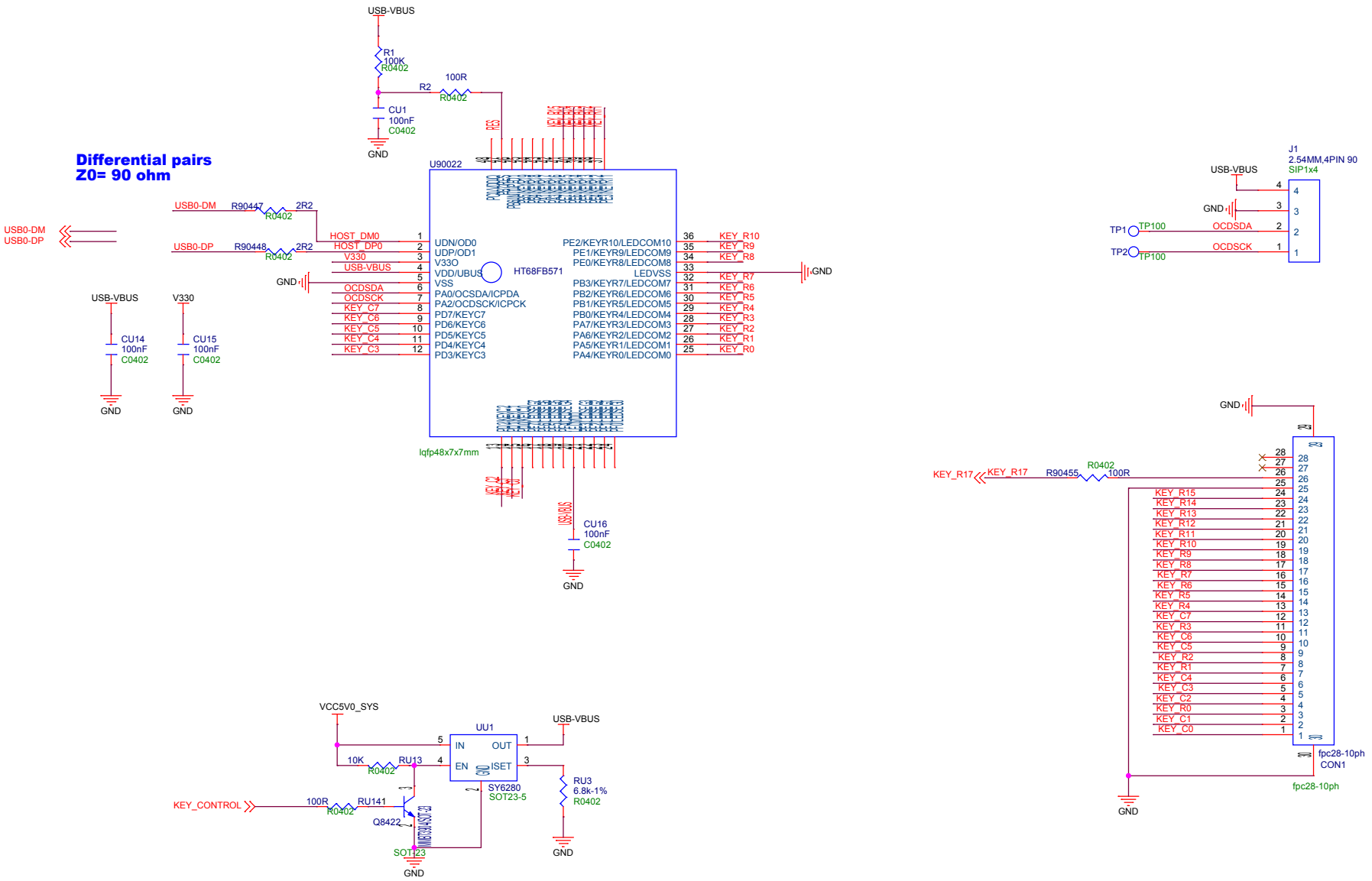


| Xunlong Software Co.,Limited | | |
|---|---|---|
| Design Name: ORANGEPI 800 | | |
| Size: A3 | Page Name: KEYBOARD | Rev: 1.8 |
| Date: Tuesday, November 08, 2022 | Sheet 27 of 27 | |